INSTALLATION GUIDE

STONE CHIP COATED METAL ROOF TILES

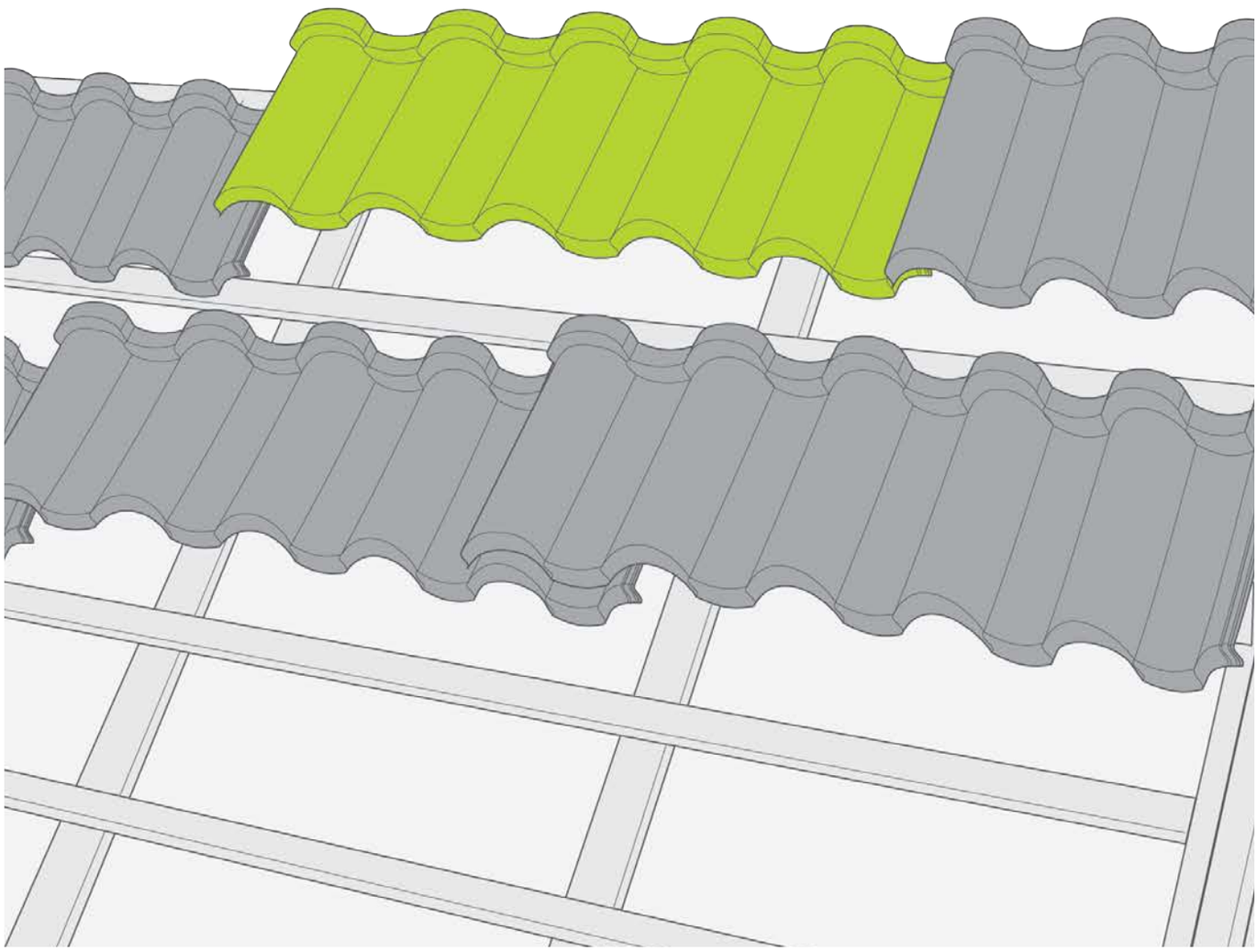

Novatik®

"A ROOF FOR NINE LIVES,
GUARANTEED BY THE EXPERTS!"

NOVATIK.RO

IMPORTANT DATA

>STORAGE

- Novatik metal tiles are delivered packed on wood pallets in polyethylene foil covers.
- It is recommended to avoid shocks during transport. No more than 2 pallets high shall be stacked during transportation.
- It is prohibited the transport of metallic tiles in bulk.
- It is prohibited to unload the tiles by tipping or throwing.
- Loading/unloading the roof tiles pallets will be carried out with the truck. In case of manual unloading of the modules, they will be placed on the pallets observing the original configuration to prevent any scratches.
- The storage of Novatik NATURA modules and Novatik NATURA accessories will be done only indoors, in enclosed, dry and ventilated areas where the climate conditions do not have rapid changes in temperature and humidity.
- Metal modules and accessories must not be stored in places with chemical corrosion factors: chlorine, smoke, ash, cement dust. It is recommended to install the metal tiles within 16 weeks of the date of purchase.

CLASSIC

12°-90°

SLATE/WOOD/ROMAN/STONE

16°-90°

>MINIMUM INSTALLATION PITCH

Novatik NATURA CLASSIC tiles can be installed on roofs with an angle between 12 and 90 degrees, Novatik NATURA SLATE tiles, WOOD and ROMAN tiles can be installed on roofs with an angle between 16 and 90 degrees.

>NON COMPATIBLE ACCESSORIES

Upon fixing of other Novatik accessories or gutters above the roof level, it is recommended not to use materials that can cause corrosion damages through corrosion. (e.g. copper, stainless steel, etc.).

>ROOF TRAFFIC

People walking on the roofed area should wear soft rubber sole shoes. When walking on the roof, step on the pan in the front of the modules, which is supported by battens. You will thus avoid possible module deformation. Roof traffic should be maintained to a minimum in order to avoid tile damage. The modules have to be fixed progressively, from the ridge of the roof towards the (eaves), so the completed sections are not walked on more than necessary during installation.

>LIABILITY

The architect, builders and roof installers are committed to ensuring that all roof elements (e.g. anti-condensation sheet, counter-battens heat insulation and vapors barrier) are adequately fixed.

>NON-COMPLIANT TOOLS

Novatik NATURA stone chip coated metal roof tiles should only be installed with tools recommended by Novatik. Tools generating heat upon cutting, as well as angle grinders should not be used, as they trigger the delamination of the coating layers, which will corrode, in time.

>PACKAGING

The tiles are stacked on wooden pallets and wrapped in customized plastic sheeting, and the accessories are packaged in stretchwrap. A pallet contains 350 Novatik NATURE modules, corresponding to approximately 167 sqm of roof in the Novatik NATURE WOOD case and approximately 163 sqm in the case of Novatik NATURE CLASSIC, Novatik NATURE SLATE and Novatik NATURE ROMAN. A tile pallet base measures 1400 x 1080 mm, with 850 mm in height. The weight of a complete pallet is maximum 1014 kg.

1 PALLET:
350 NOVATIK NATURA MODULES
WEIGHT 1014 KG
LENGTH 1400 MM
WIDTH 1080 MM
HEIGHT 850 MM
1 PALLET COVERAGE

CLASSIC/SLATE/ROMAN
163 SQM

WOOD
167 SQM

> HANDLING

Tiles have to be handled with care, so as to avoid surface coating damage. In the case of minor damage, it can be remedied with the touchup spray. During handling or assembly, small quantities of rock may appear detached from the top layer of the cover (wear layer), which is considered normal and is not considered a manufacturing defect. Novatik NATURA does not fit at temperatures below + 5° C and humidity.

> RECOMMENDED TOOLS

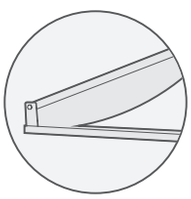

GUILLOTINE

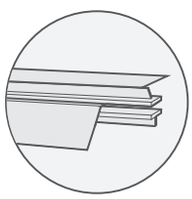

BENDER

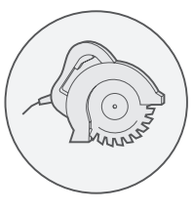

CIRCULAR METAL SAW BLADE

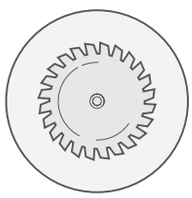

CIRCULAR METAL DISK

HAMMER

HAND BENDER

HAND SNIPS

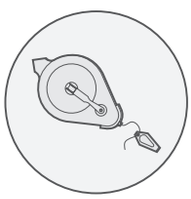

PLOTTING WIRE DEVICE

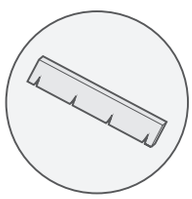

HORIZONTAL CLEAVES FASTEN-ING CALIBER

SQUARE

MEASURING TAPE

NAIL GUN

SOFT SOLE LEATHER FOOTWEAR

FIXING USING ELECTRIC POWER DRILL

Novatik

NATURA | CLASSIC

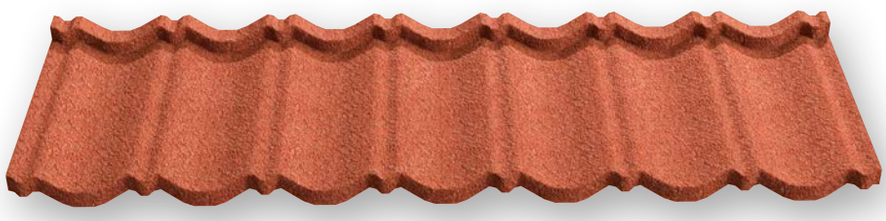

COLOURS:

			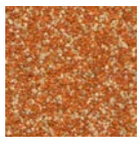		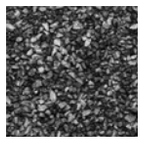	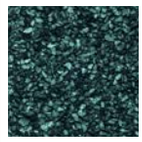	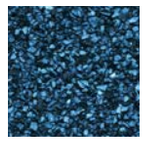	
DARK MOON	BROWN EARTH	TERRA ROSSA	SAND	RED CLAY	SILVER MOON	ANTIC JAD	GALAXY BLUE	GRAPHITE GREY

With its curved lines and symmetric profile, Novatik NATURA CLASSIC is versatile and timeless. It is the perfect choice for those seeking an elegant roof style that will always be in fashion.

Novatik NATURA CLASSIC tiles are produced using premium quality steel, protected with ZnMg 250 g/sqm alloy plus additional multiface® anti-corrosion protection on both sides, and covered with natural volcanic stone chips. The multiface® protective layer represents a high-performance treatment applied to steel, with a thickness of 1 to 2 microns, and is an almost invisible (thin organic coating) sealant applied to hot-dip galvanized steel strips (ZnMg). Its remarkable properties give the steel a durable premium sealing, with excellent corrosion resistance and superior adhesion of subsequent finishing layers.

30
YEARS
AESTHETIC WARRANTY

60
YEARS
TECHNICAL WARRANTY

TECHNICAL INFORMATION

TOTAL LENGTH	1340 mm
LENGTH OF COVER	1260 mm
WIDTH OF COVER	370 mm
TILES / SQM	2.15 modules/sqm
ROOF PITCH	Min. 12°
WEIGHT / SQM	6.50 kg/sqm
BATTEN SPACING	370 mm
Steel type / Steel thickness	DX51 / 0.45 mm
CORROSION RESISTANCE	Protective Layer ZnMg 250 g/sqm + multiface® anti-corrosion protection
Textured finished	Acrylic resin + Volcanic rock (Basalt) + Protective layer
Total maximum thickness	2.1 mm

Novatik

NATURA | SLATE

COLOURS:

DARK MOON

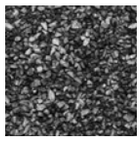

SILVER MOON

BROWN EARTH

GRAPHITE GREY

All the appearance of natural slates, combined with the strength of steel and the weather resistance of a rock chip coating, this minimalist design is an ideal choice for those seeking a more modern look. With its flat profile and neutral colour, NATURA SLATE is suitable for both vertical and pitched roofs, perfectly meeting the needs of contemporary architectural design.

Novatik NATURA SLATE tiles are produced using premium quality steel, protected with ZnMg 250 g/sqm alloy plus additional multiface® anti-corrosion protection on both sides, and covered with natural volcanic stone chips. The multiface® protective layer represents a high-performance treatment applied to steel, with a thickness of 1 to 2 microns, and is an almost invisible (thin organic coating) sealant applied to hot-dip galvanized steel strips (ZnMg). Its remarkable properties give the steel a durable premium sealing, with excellent corrosion resistance and superior adhesion of subsequent finishing layers.

30
YEARS
AESTHETIC WARRANTY

60
YEARS
TECHNICAL WARRANTY

TECHNICAL INFORMATION

TOTAL LENGTH	1280 mm
LENGTH OF COVER	1225mm
WIDTH OF COVER	370 mm
TILES / SQM	2.17 modules/sqm
ROOF PITCH	Min. 16°
WEIGHT / SQM	aprox. 6.23 kg/sqm
BATTEN SPACING	370 mm
Steel type / Steel thickness	DX51 / 0.45 mm
CORROSION RESISTANCE	Protective Layer ZnMg 250 g/sqm + multiface® anti-corrosion protection
Textured finished	Acrylic resin + Volcanic rock (Basalt) + Protective layer
Total maximum thickness	2.1 mm

Novatik

NATURA | WOOD

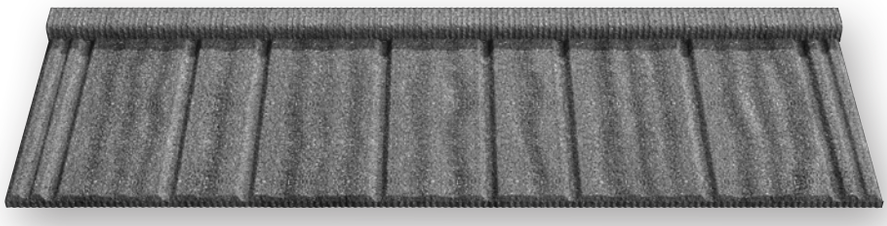

COLOURS:

DARK MOON

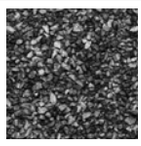

SILVER MOON

BROWN EARTH

GRAPHITE GREY

BLACK VOLCANO

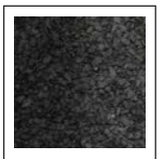

ANTIC BLACK

Novatik NATURA WOOD captures the natural beauty of a wood shingle roof. Long lasting, easy and quick to install and low maintenance, the modern materials used in its manufacture overcome the disadvantages of a traditional wood roof. Novatik NATURA WOOD is the ideal choice for those who are seeking a roof with a more rustic appeal.

Novatik NATURA WOOD tiles are produced using premium quality steel, protected with ZnMg 250 g/sqm alloy plus additional multiface® anti-corrosion protection on both sides, and covered with natural volcanic stone chips. The multiface® protective layer represents a high-performance treatment applied to steel, with a thickness of 1 to 2 microns, and is an almost invisible (thin organic coating) sealant applied to hot-dip galvanized steel strips (ZnMg). Its remarkable properties give the steel a durable premium sealing, with excellent corrosion resistance and superior adhesion of subsequent finishing layers.

30
YEARS
AESTHETIC WARRANTY

60
YEARS
TECHNICAL WARRANTY

TECHNICAL INFORMATION

TOTAL LENGTH	1375 mm
LENGTH OF COVER	1315 mm
WIDTH OF COVER	370 mm
TILES / SQM	2.09 modules/sqm
ROOF PITCH	Min. 16°
WEIGHT / SQM	aprox. 7.16 kg/sqm
BATTEN SPACING	370 mm
Steel type / Steel thickness	DX51 / 0.45 mm
CORROSION RESISTANCE	Protective Layer ZnMg 250 g/sqm + multiface® anti-corrosion protection
Textured finished	Acrylic resin + Volcanic rock (Basalt) + Protective layer
Total maximum thickness	2.1 mm

Novatik

NATURA | ROMAN

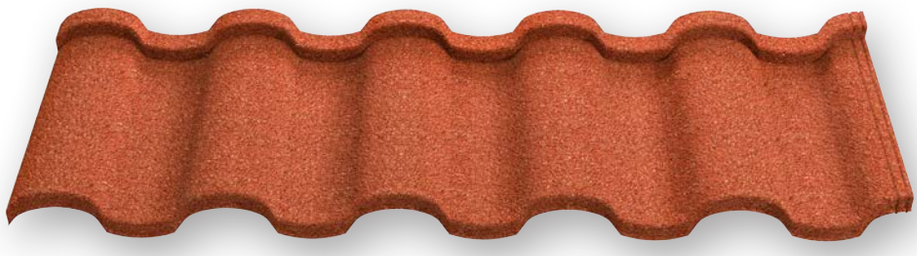

COLOURS:

DARK MOON

BROWN EARTH

TERRA ROSSA

SAND

GRAPHITE GREY

With its warm colours, smooth slopes and broad curves, Novatik NATURA ROMAN perfectly captures the ageless appeal of sunbaked Mediterranean roofs, but unlike traditional terracotta tiles our NATURA ROMAN panels are lightweight and immensely strong. Novatik NATURA ROMAN tiles are produced using premium quality steel, protected with an Aluminium Zinc layer on both sides and covered with natural volcanic stone chips. This protection of the steel we use, provides our product 8 times higher corrosion resistance than other metal tiles.

30
YEARS
AESTHETIC WARRANTY

60
YEARS
TECHNICAL WARRANTY

TECHNICAL INFORMATION

TOTAL LENGTH	1320 mm
LENGTH OF COVER	1270 mm
WIDTH OF COVER	370 mm
TILES / SQM	2.15 modules/sqm
ROOF PITCH	Min. 16°
WEIGHT / SQM	aprox 7 kg/sqm
BATTEN SPACING	370 mm
Steel type / Steel thickness	S280GD+AZ150 / 0.40 mm
CORROSION RESISTANCE	Protective Layer AlZn 150 g/sqm
Textured finished	Acrylic resin + Volcanic rock (Basalt) + Protective layer
Total maximum thickness	2.1 mm

NOTE: In the near future, the Novatik NATURA ROMAN profile will be available in the new NATURA generation of profiles (steel protected by ZnMg 250 g/sqm alloy plus additional multiface® anti-corrosion protection).

Novatik
NATURA | STONE

The consistency in our production process and our commitment to developing new styles for our customer's roofs drives us to implement a brand new profile in our stone chip coated metal tiles range: Novatik NATURA STONE. We designed Novatik NATURA STONE profile to recreate the unique image of the old traditional stone roofs. Our NATURA STONE tiles are produced using premium quality steel, protected with an Aluminium Zinc layer on both sides and covered with natural volcanic stone chips. This protection of the steel we use, provides our product 8 times higher corrosion resistance than other metal tiles. Our Novatik NATURA STONE tiles with their special design, offer a genuine look of the old traditional stone roofs, making your house extraordinary.

COLOURS:

DARK MOON

GRAPHITE GREY

30
YEARS
AESTHETIC WARRANTY

60
YEARS
TECHNICAL WARRANTY

TECHNICAL INFORMATION

TOTAL LENGTH	1310 mm
LENGTH OF COVER	1250 mm
WIDTH OF COVER	370 mm
TILES / SQM	2.15 modules/sqm
ROOF PITCH	Min. 16˚
WEIGHT / SQM	aprox. 6.23 kg/sqm
BATTEN SPACING	370 mm
Steel type / Steel thickness	S280GD+AZ150 / 0.40 mm
CORROSION RESISTANCE	Protective Layer AlZn 150 g/sqm
Textured finished	Acrylic resin + Volcanic rock (Basalt) + Protective layer
Total maximum thickness	2.1 mm

NOTE: In the near future, the Novatik NATURA STONE profile will be available in the new NATURA generation of profiles (steel protected by ZnMg 250 g/sqm alloy plus additional multiface® anti-corrosion protection).

>NOTES

ACCESSORIES

Novatik NATURA

STONE
SLATE
ROMAN
WOOD
CLASSIC

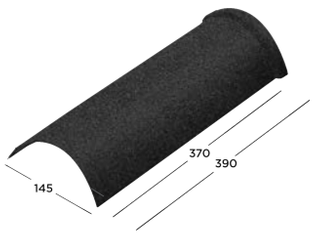

BARREL TRIM

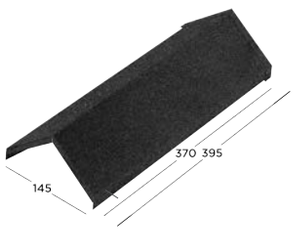

ANGLE TRIM

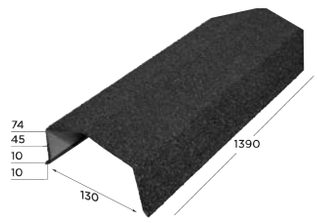

RECTANGULAR RIDGE

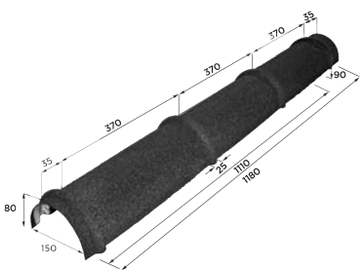

BARREL THREE ELEMENTS

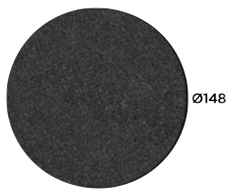

BARREL END

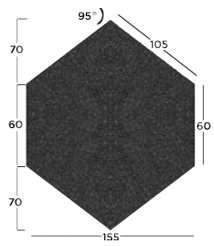

ANGLE TRIM END

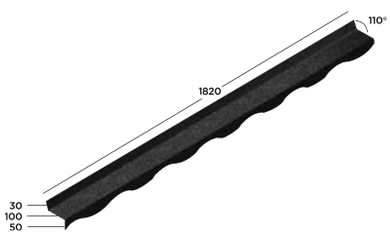

ROMAN RIDGE FLASHING

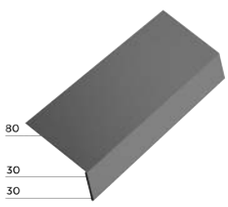

ANTI-CONDENSATION FLASHING

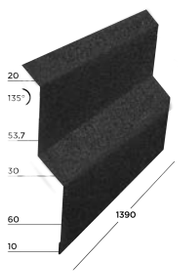

WALL FLASHING

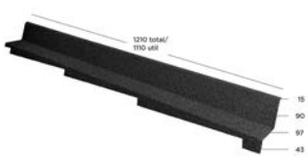

WALL FLASHING SCRIBED RIGHT

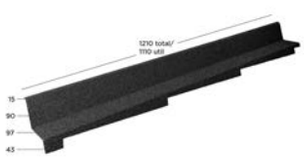

WALL FLASHING SCRIBED LEFT

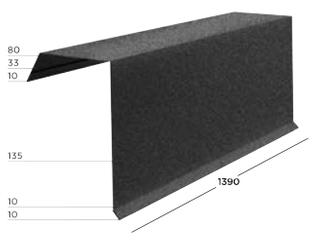

BOX BARGE

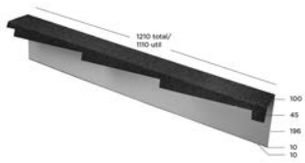

BOX BARGE SCRIBED RIGHT

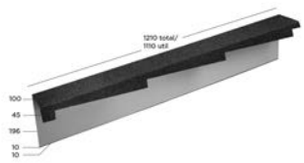

BOX BARGE SCRIBED LEFT

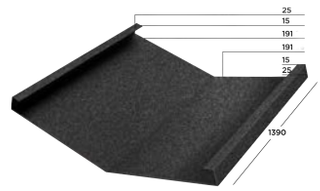

VALLEY

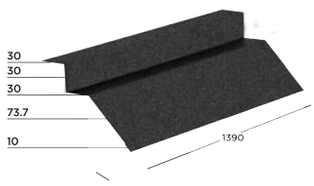

EAVES FLASHING

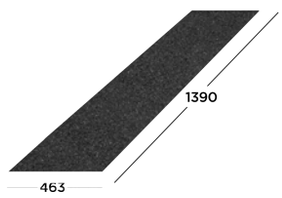

FLAT SHEET

VENT

SANITARY VENT

NAILS 1.5 KG / BOX

REPAIR KIT

NAIL SEALING TAPE

ROOFING MEMBRANE 115, 140, 160

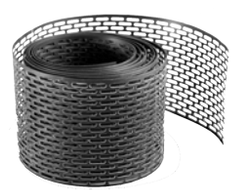

PERFORATED MESH TO PREVENT THE ENTRY OF BIRDS AND INSECTS

Novatik offers a complete range of roofing accessories. Installing accessories correctly, ensures the roof is weatherproof and properly ventilated, as well as being more visually appealing.

INSTALLING NOVATIK TILES

>PREPARING SITE DOCUMENTATION

STEP 1

Prior to the completion of the site handover documentation the senior installer shall make sure that all his team members are trained according to the labour safety standards and are equipped with the specified operating and protection equipment (overalls, leather protection footwear with soft rubber sole, safety harnesses, protective goggles, safety helmet and ear protectors).

Documentation will state all height variations compared to the initial drawings or designs, any possible roof truss mounting, problems and/or configuration faults, as well as the way in which these non-compliances will be resolved. This documentation shall be signed by both parties.

>INSTALLING ANTI-CONDENSATION MEMBRANES (FIG. 1)

STEP 2

The first sheet layer shall be laid by unrolling in parallel with the eaves, leaving approximately 3 cm of sheet overlapping the eaves fascia board. The 3 cm of membrane are necessary for the event in which the anticondensation flashing is displaced to the exterior in order to allow the installing of the wooden box barge to the eaves. The next rows, up to the ridge, shall be laid overlapping onto the width of the marking printed on the membrane. In the absence of the marking, the overlapping shall not be of less than 10 cm. In the valley area, for higher safety and in order to avoid overlapping mistakes, a continuous sheet strip 75 cm wide shall be mounted (½ of the sheet roll width) on the entire length. The side sheet rows shall overlap on this sheet up to no more than 10 cm of the valley axis. The sheet shall be fastened using the staple hammer. The staples shall be fastened in the roof timbers area so as to allow for vertical battens. In the case of valleys, the fastening shall be performed in the area to be protected by the steel valley bordering batten.

WARNING!

The fastening of the membrane in other areas than the indicated ones may lead to condensation problems. In the case of cold roofs (with ventilation layer above the thermal insulation) a ventilation space shall be allowed in the ridge area.

STEP 3

>VERTICAL BATTENS INSTALLING

The function of the vertical batten is to ensure a ventilation space underneath the roofing. The height of the vertical batten can range between 25 and 50 mm. Thicker battens increase the ventilation space, ensuring more efficient outlet of vapours crossing the anticondensation sheet. The minimum recommended section is of 25 mm x 50 mm.

For adequate air circulation, it has to enter at the eaves level and exit at the ridge level, through free spaces or through special ventilation accessories.

WARNING!

Before installing the vertical batten you should install the gutter brackets, first under the anti-condensation membrane, directly on the hard boarding. Then, the gutters and the respective accessories (gutter joints, miters, funnel pipes) have to be installed and after that the anticondensation flashing. (fig. 4, 5, 6)
The vertical batten shall be installed over the anti-condensation sheet, in the area of each roof timber oriented towards the eaves towards the ridge– fig. 2. Before being installed, the sealing tape and Novatik strip shall be fixed to the vertical strips. The sealing tape is designed to hydroisolate holes made by nails or screws in the anti-condensation foil, thus preventing accidental infiltration. The absence of these battens leads to ventilation obstructions and, at the same time, to the retention of condensation by the horizontal battens.

The same batten size shall also be used for the valleys boarding. The battens bordering the valley shall be mounted with a distance of 192 mm on each side of the valley.

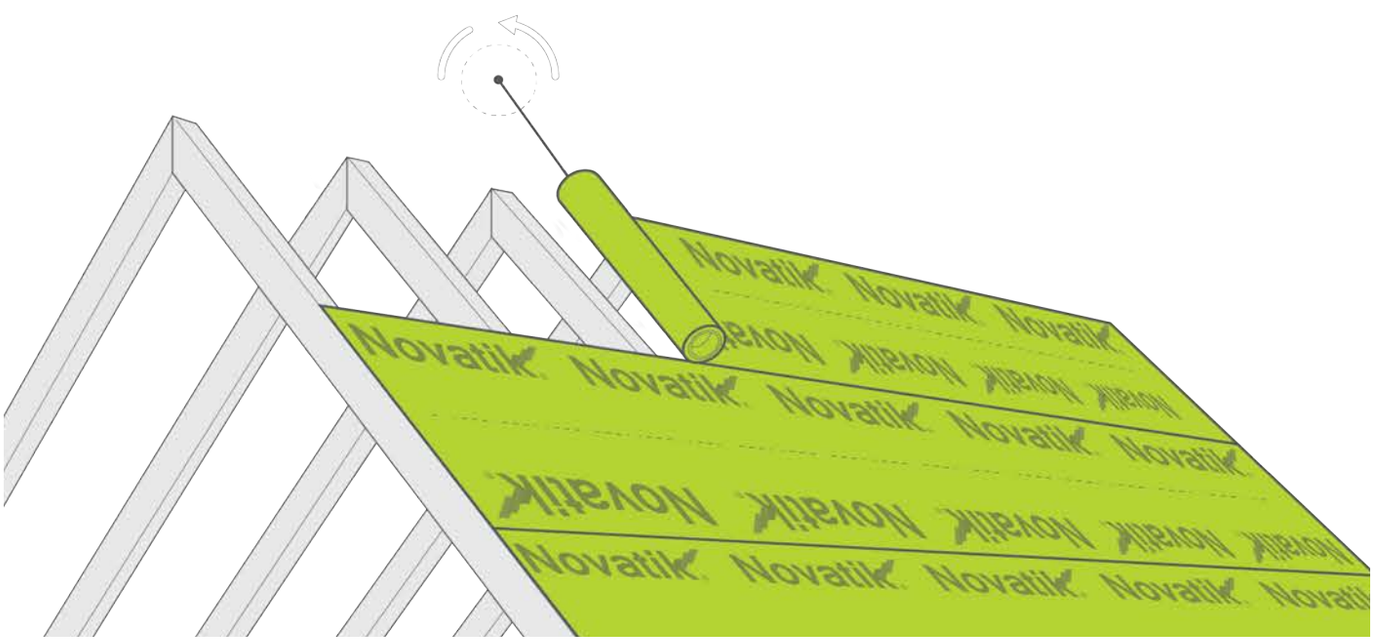

fig.1 ROOFING MEMBRANE INSTALLATION

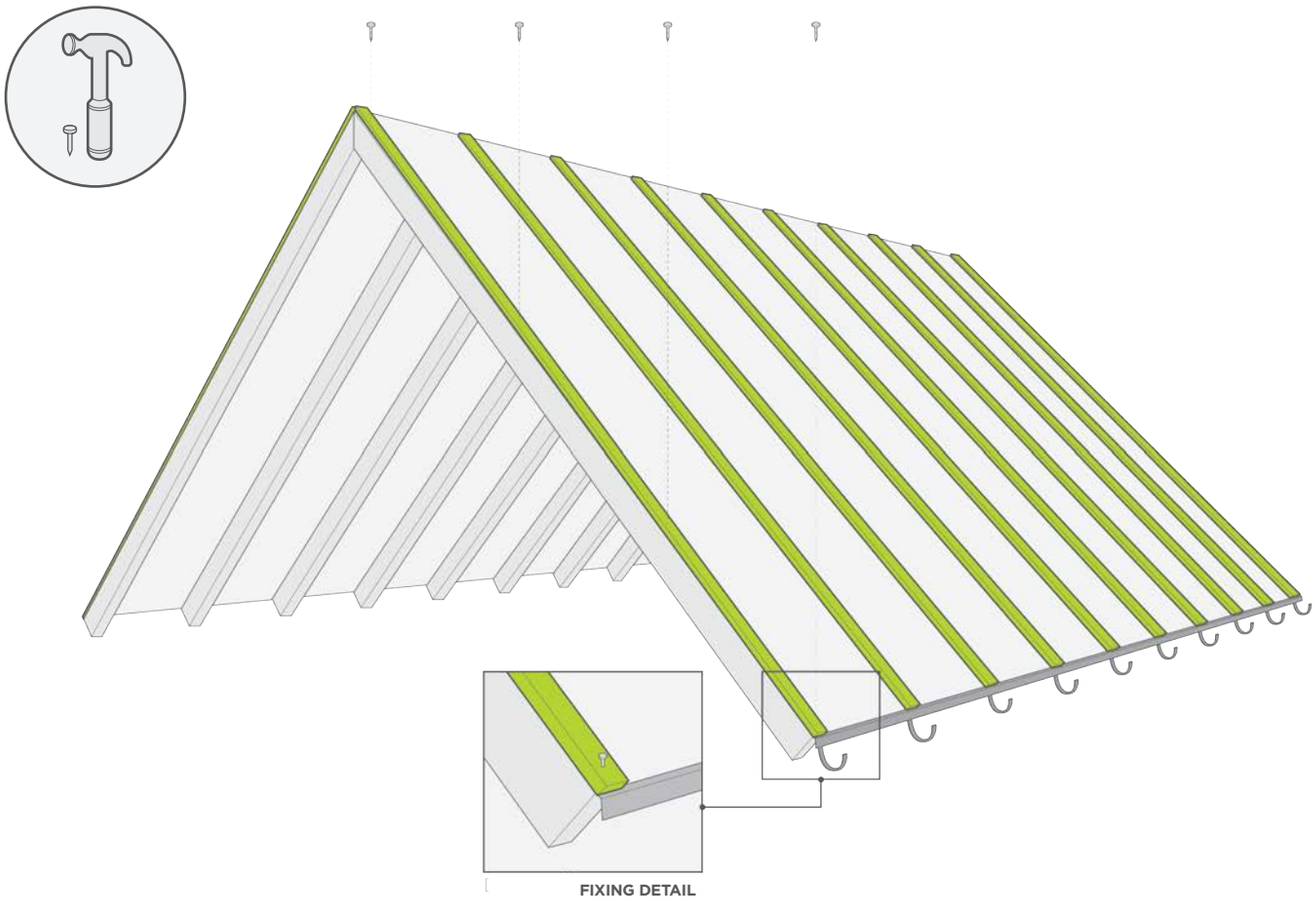

fig.2 INSTALLING OF THE VERTICAL BATTENS

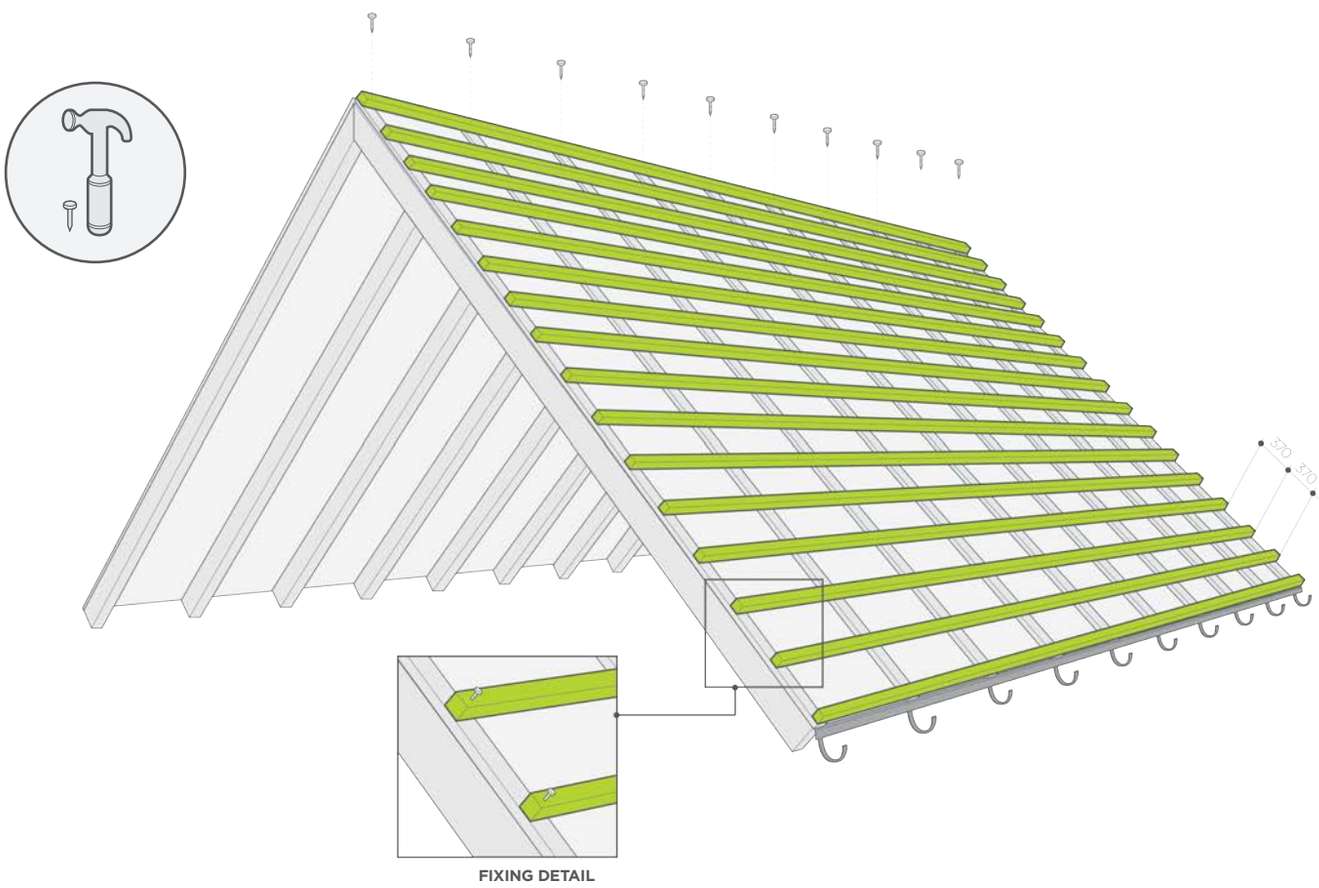

fig.3 INSTALLING OF THE HORIZONTAL BATTENS

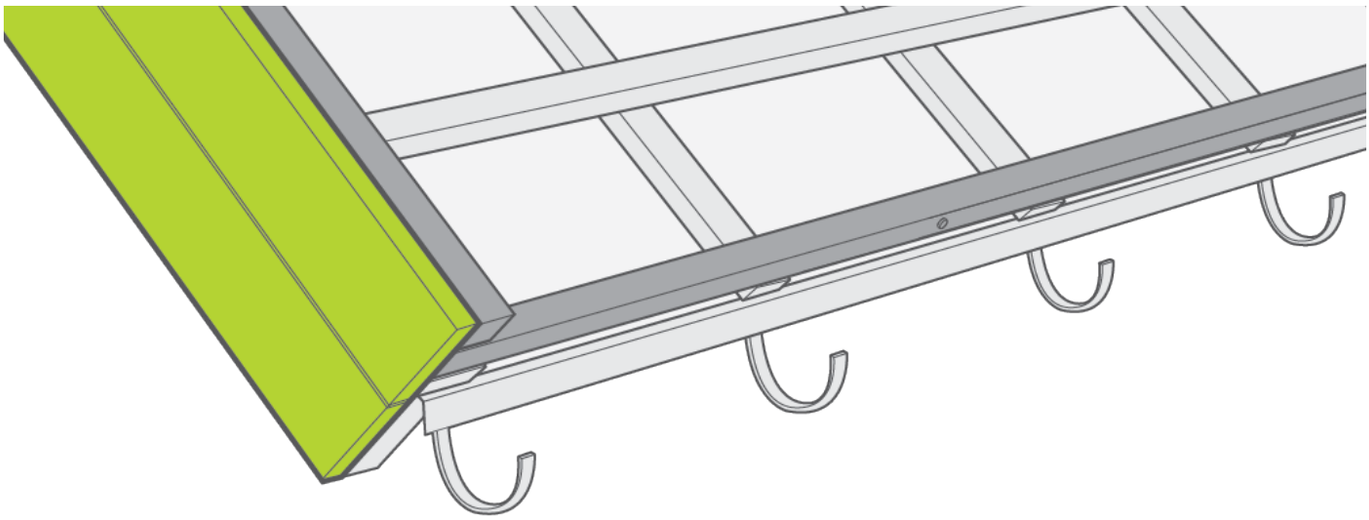

fig.4 INSTALLING BATTENS FOR EAVES APRON AND FASCIA BOARD

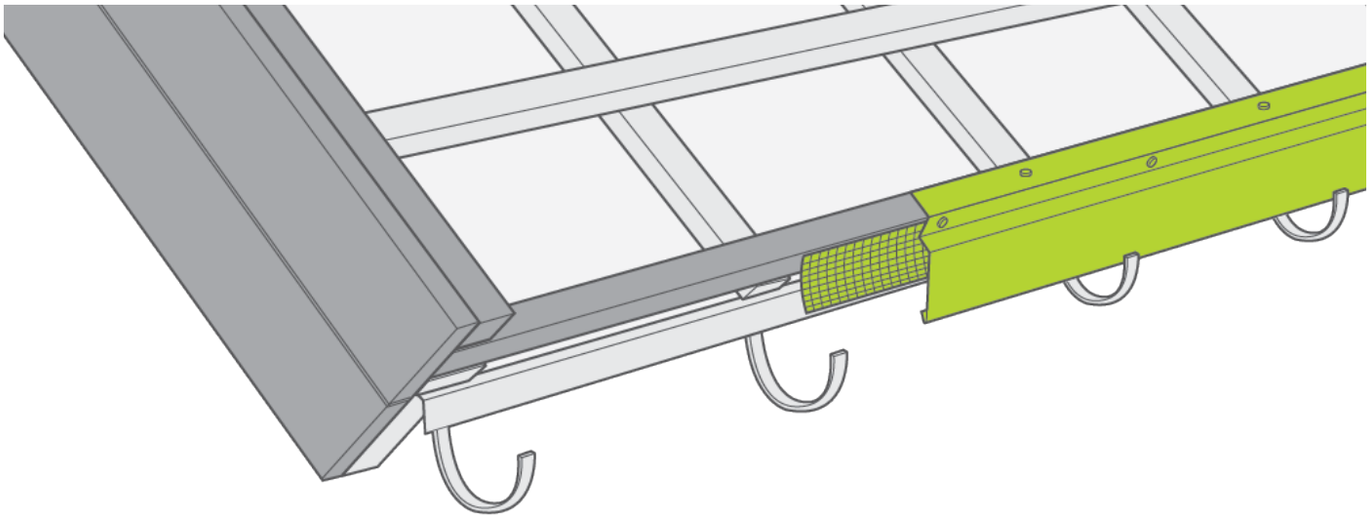

fig.5 INSTALLING BIRD PROTECTION GRID AND EAVES FLASHING

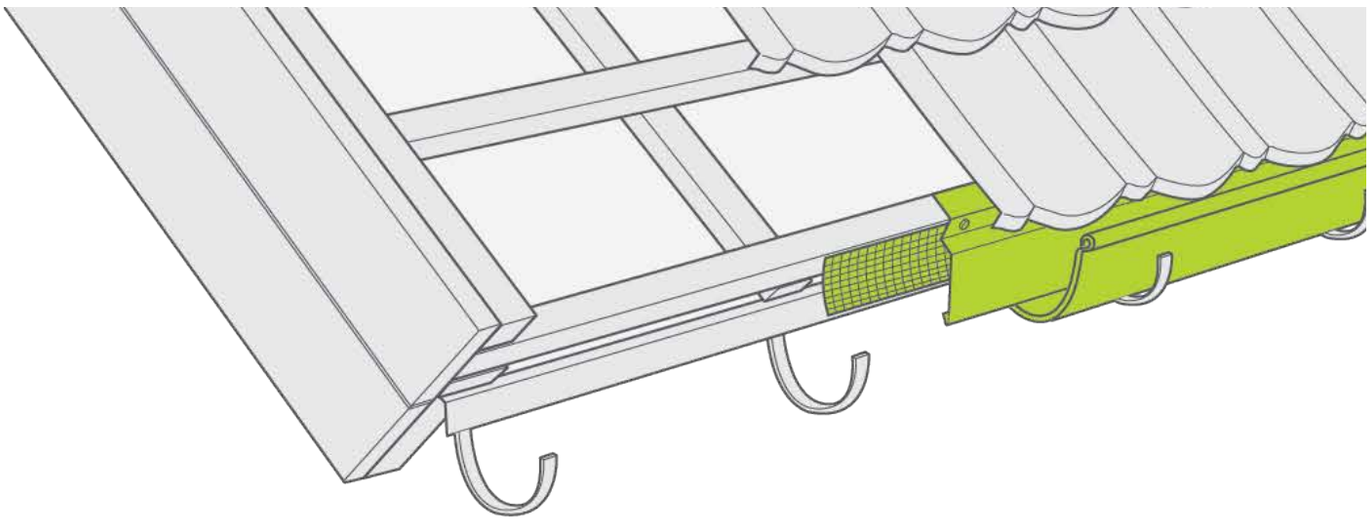

fig.6 EAVES DETAIL WITH ANTICODENSATION FLASHING, BIRD PROTECTION GRID AND EAVES FLASHING

>INSTALLATION OF NOVATIK NATURA ROMAN IN THE EAVES AREA

For Novatik NATURA ROMAN, the second horizontal batten in the eaves area shall be fixed at a distance of 350 mm from the first batten, thus providing the necessary protection against any infiltration caused by wind or storm rain. In this situation, the fixing of the first module in the eaves area will be carried out at the top of the first batten, perpendicular to the surface of the tile, making it mandatory to cover the nail with the retouching kit (fig. 7).

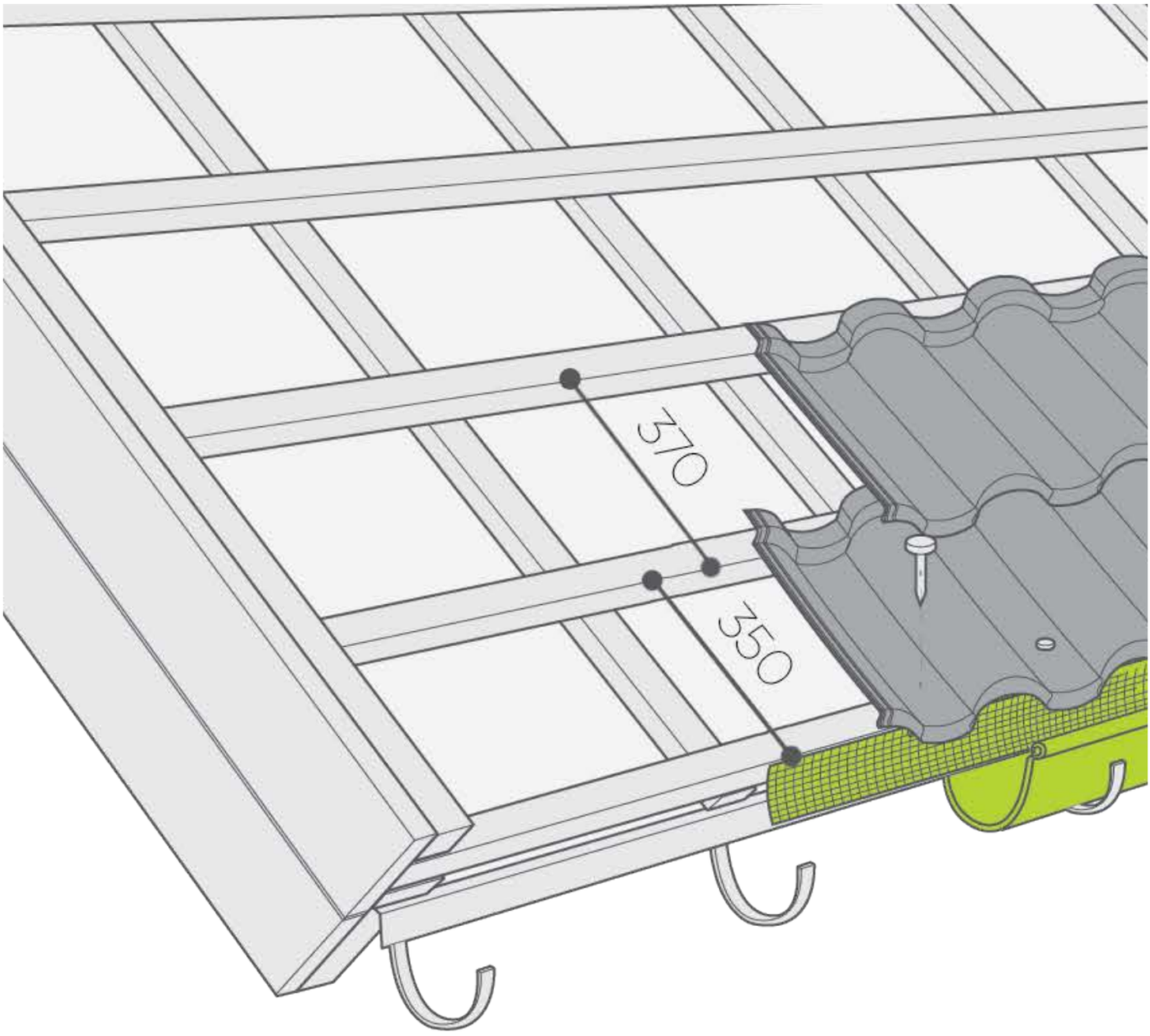

fig.7 INSTALLING OF HORIZONTAL BATTENS/STRIPS

>INSTALLATION OF VERTICAL BATTENS – ALTERNATIVE

STEP 3.1

SUCCESION OF THE INSTALLING STEPS (fig. 8)

1. Anti-codensation flashing
2. Roofing membrane
3. Vertical batten
4. Bird protection grid
5. Brackets
6. Horizontal batten
7. Gutter
8. Eaves flashing
9. Metal tile module

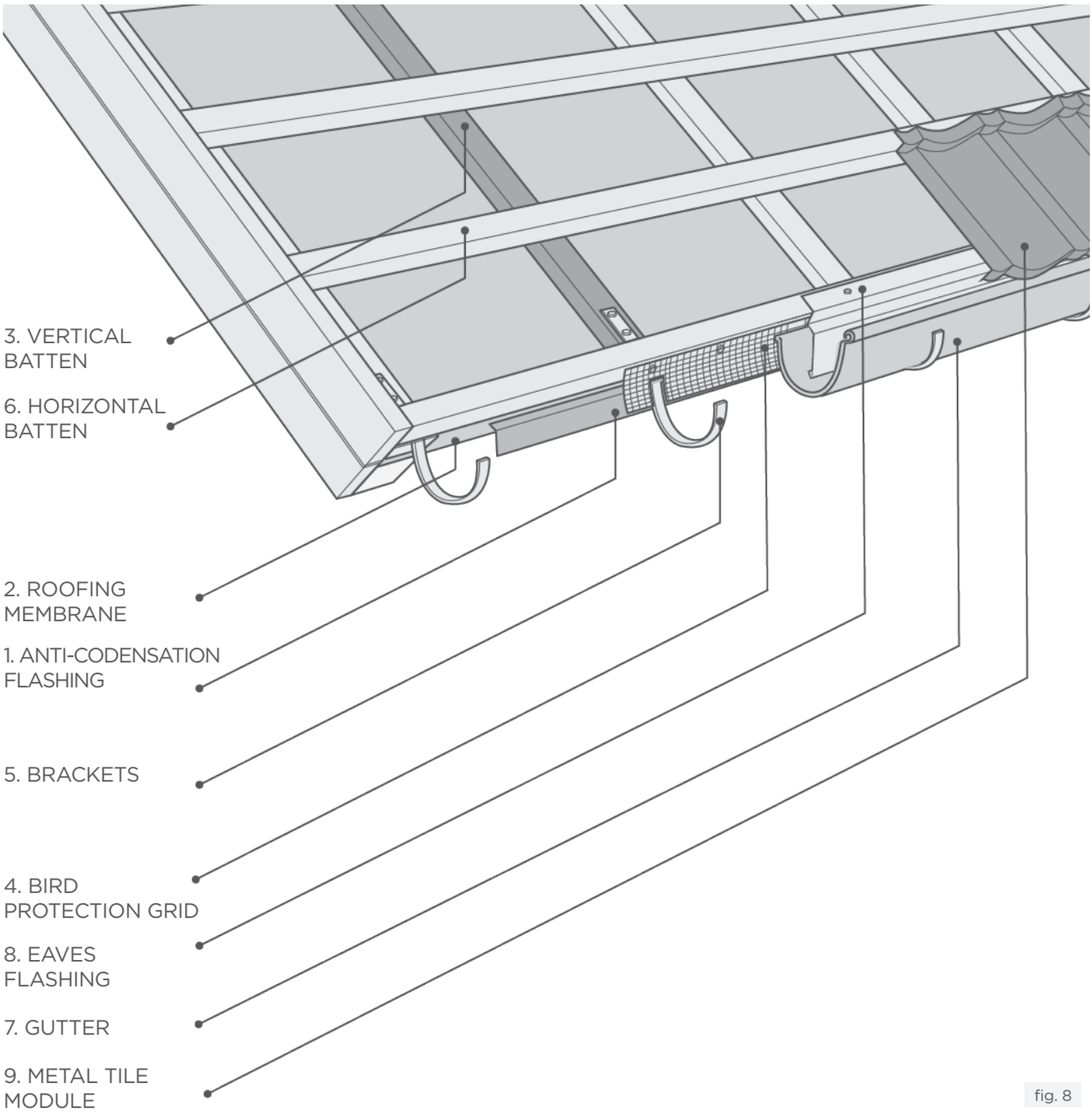

fig. 8

>FIXING VALLEYS

STEP 4

The valleys shall be installed from the downwards towards the ridge with an overlap of min. 100 mm on each valley section. They shall be fastened onto the boarding battens, using sheet clips (fig. 9, 10, 11).

fig.9 FIXING VALLEY AND HORIZONTAL BATTENS

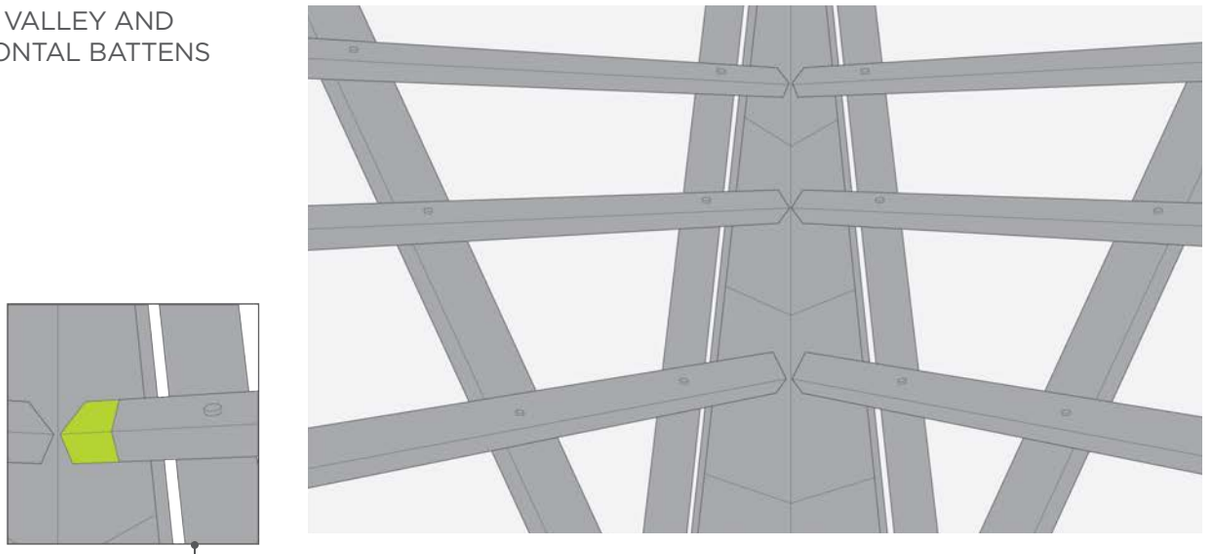

fig.10 LAYOUT OF HORIZONTAL BATTENS

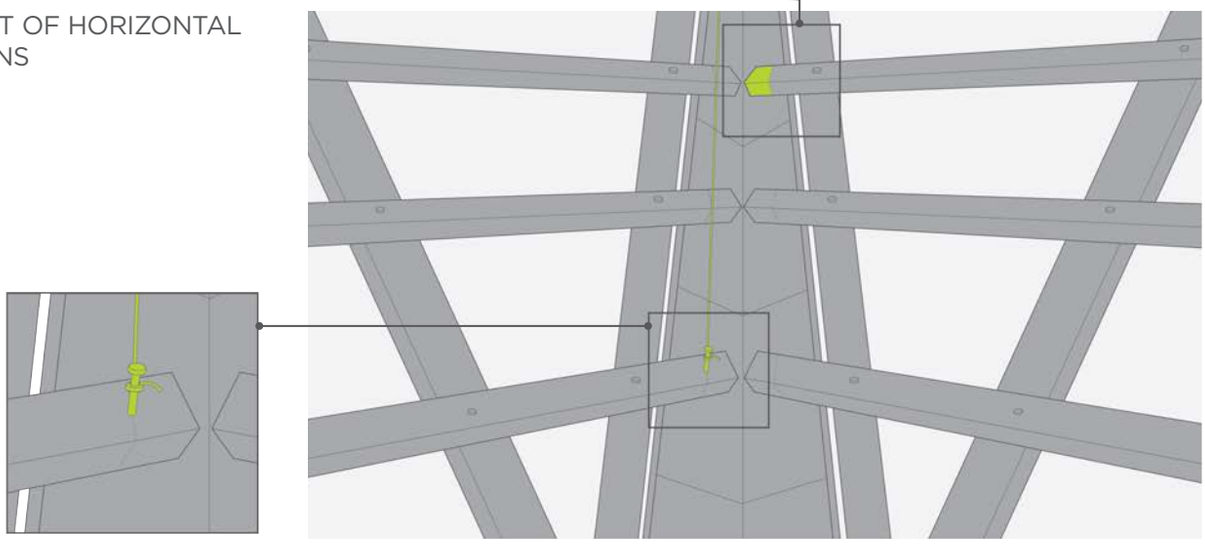

fig.11 HORIZONTAL BATTEN CUTTING

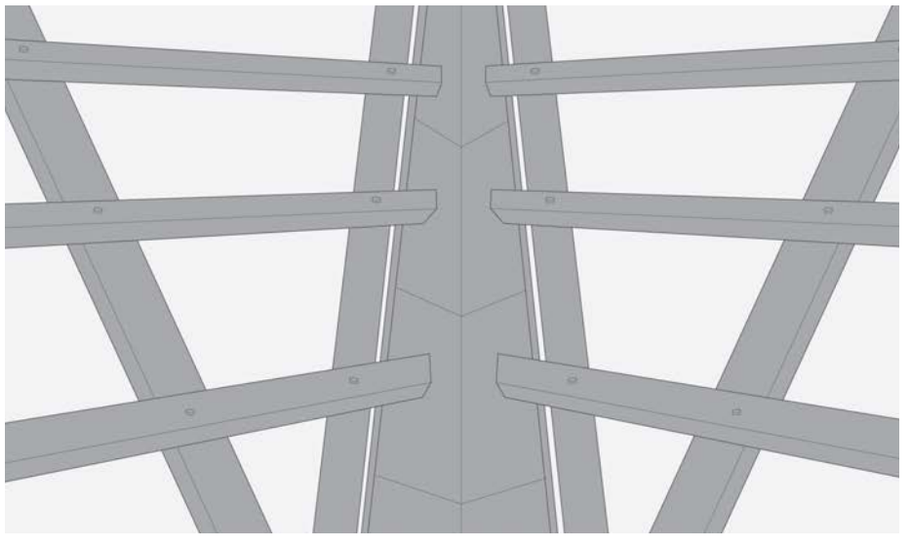

> INSTALLING HORIZONTAL BATTENS

STEP 5

The purpose of horizontal battens is to support the tiles and to allow for the fastening. They can have a section of 40 mm x 50 mm or of 50 mm x 50 mm and they are mounted from the eaves towards the ridge maintaining the distance of 370 mm, measured from the lower area of the battens (fig. 3, 12).

If the area to be covered is framed by valleys or by one valley and one box barge, the horizontal batten shall be installed from the upwards towards the downwards direction, reducing technological losses (which can sometimes be substantial). The same rule will apply for surfaces requiring water collection in the large funnel.

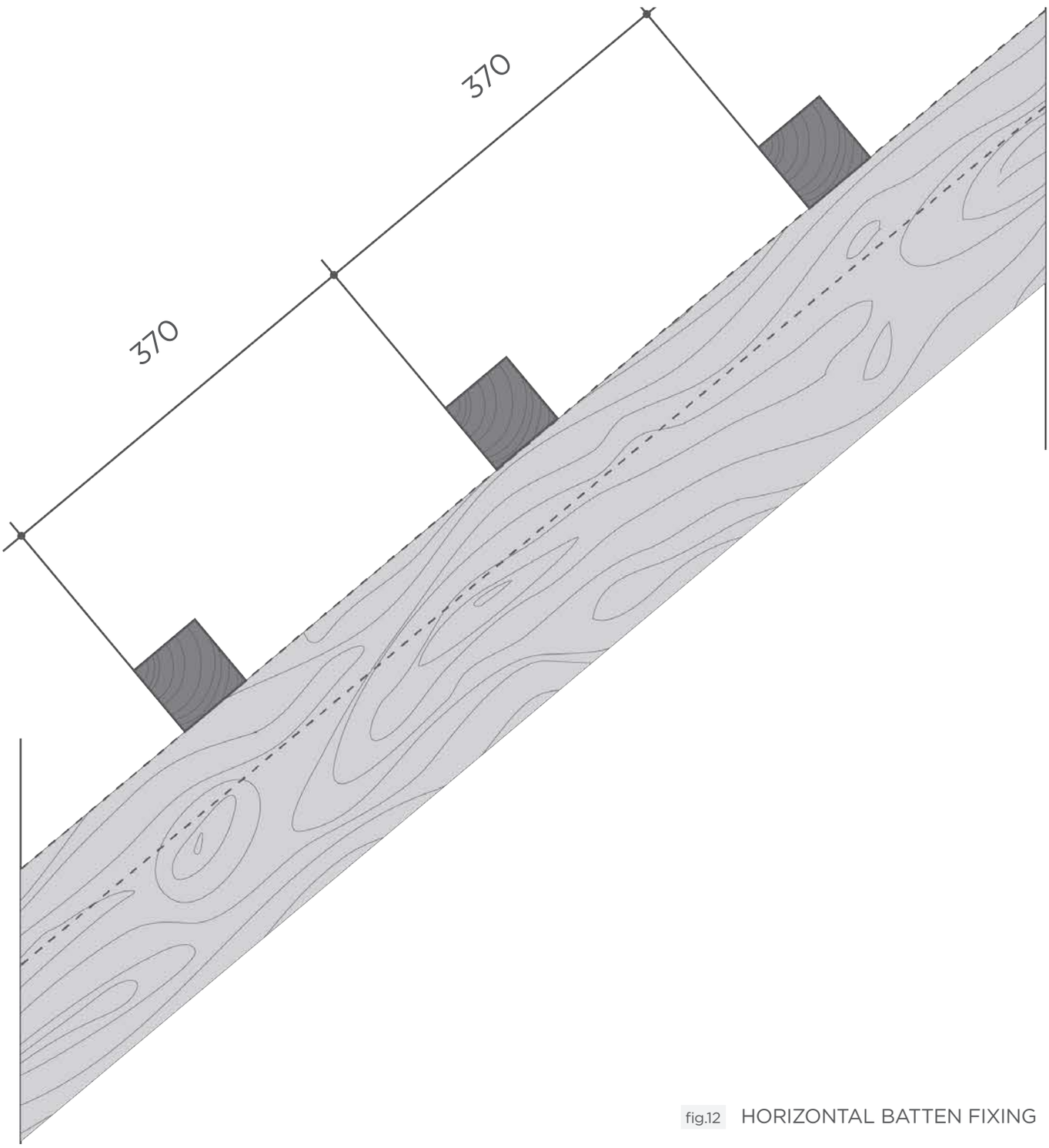

fig.12 HORIZONTAL BATTEN FIXING

> INSTALLING ADDITIONAL BATTENS

These can have a section of 40 mm x 50 mm or 50 mm x 50 mm (fig. 13, 14, 15, 16).

STEP 6

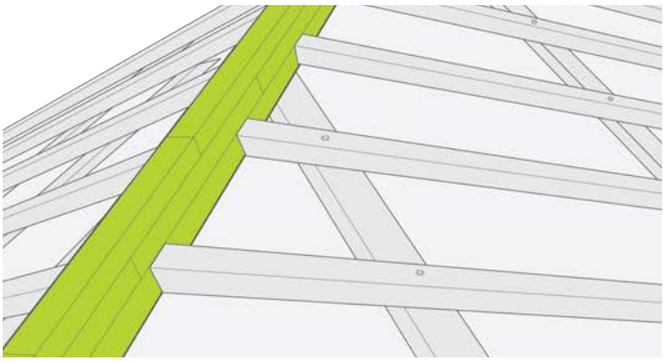

fig.13 FIXING BATTENS FOR A BEVELED RIDGE

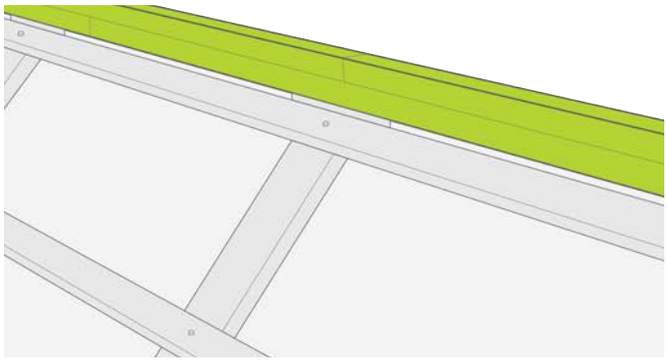

fig.14 FIXING BATTENS FOR A HORIZONTAL RIDGE

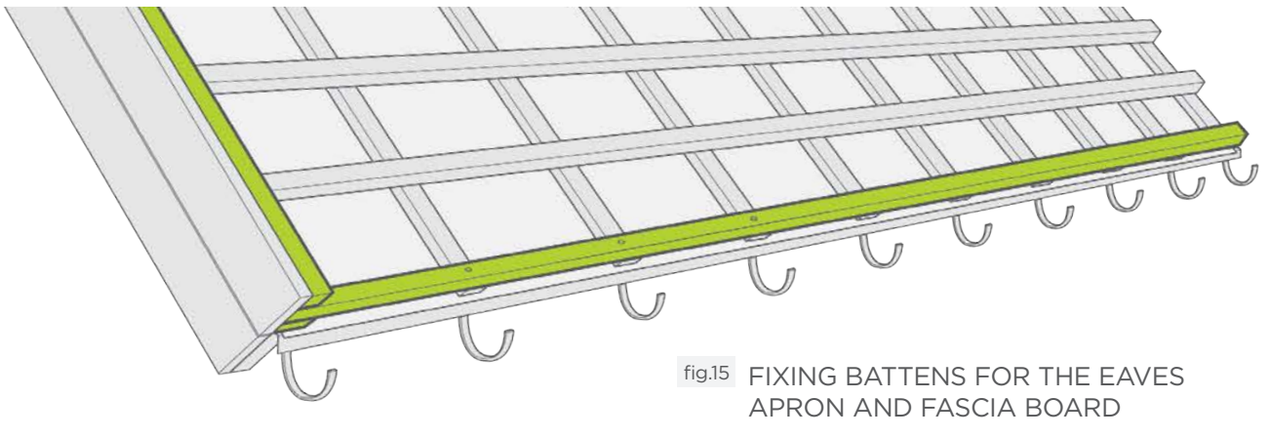

fig.15 FIXING BATTENS FOR THE EAVES APRON AND FASCIA BOARD

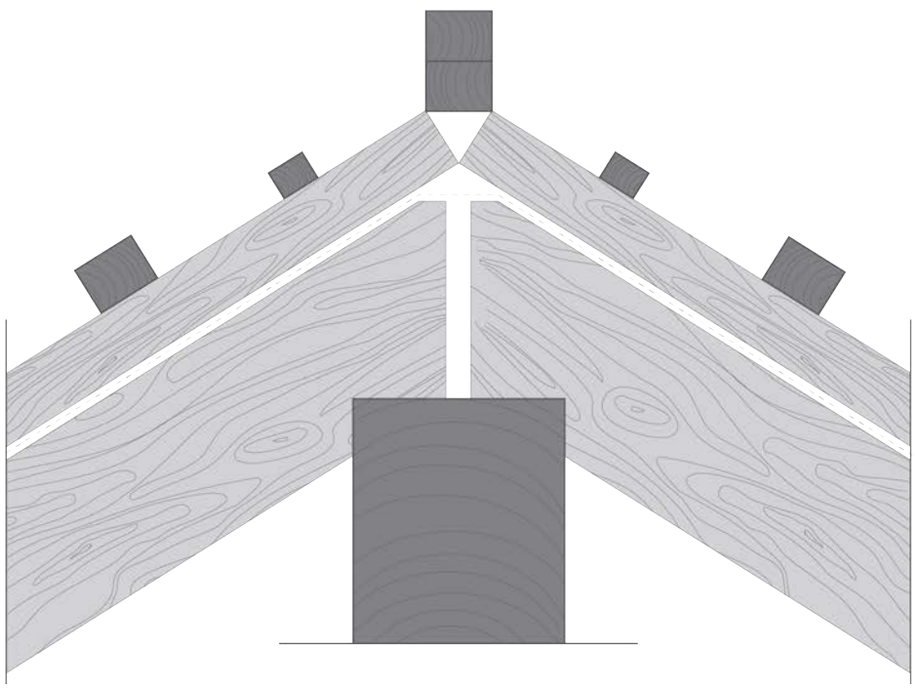

fig.16 FIXING BATTENS FOR A HORIZONTAL RIGDE – SECTION

> INSTALLING TILES

STEP 7

Place the tiles on the second row in the ridge area (see fig. 17 and 18) and fasten as shown on fig. 19 and fig. 20. The following rows will be fastened using a hammer or nail gun.

For Novatik NATURA CLASSIC and Novatik NATURA WOOD, the overlapping can be done both to the left (fig. 21. 24), and also to the right, but it shall be made in a single direction for each individual surface. It is recommended that the modules be fitted to the left. For Novatik NATURA SLATE, the overlapping can be done only to the right (fig. 22). For Novatik NATURA ROMAN, overlapping cand be done only to the left (fig. 23). For additional safety of the installers, it is recommended not to step or work on the roof when the roof is wet.

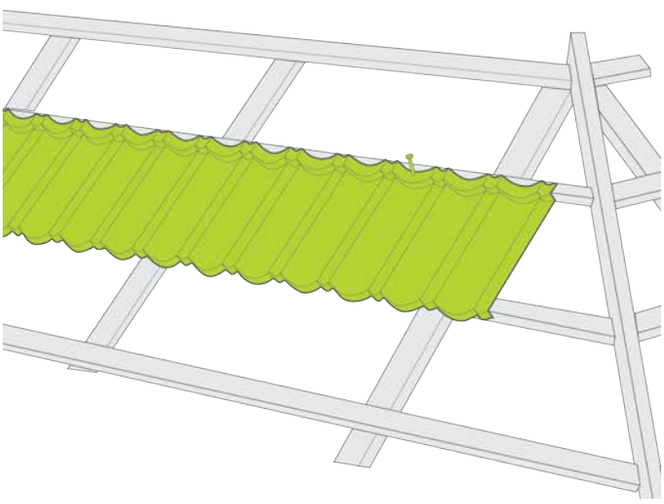

fig.17 INSTALLING OF ROW 2 IN THE RIDGE AREA

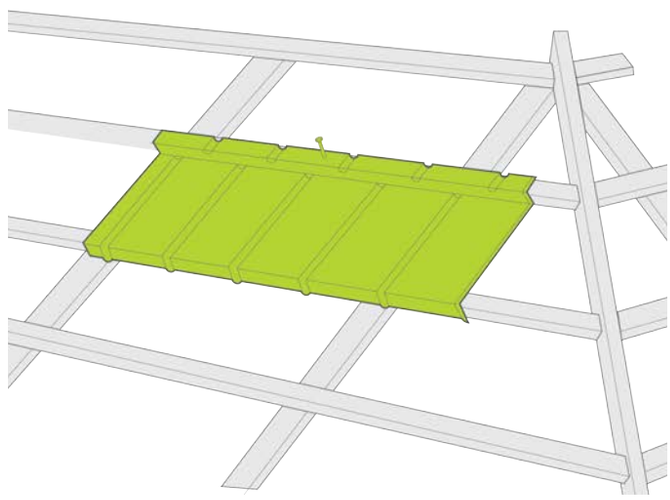

fig.18 INSTALLING OF ROW 2 IN THE RIDGE AREA

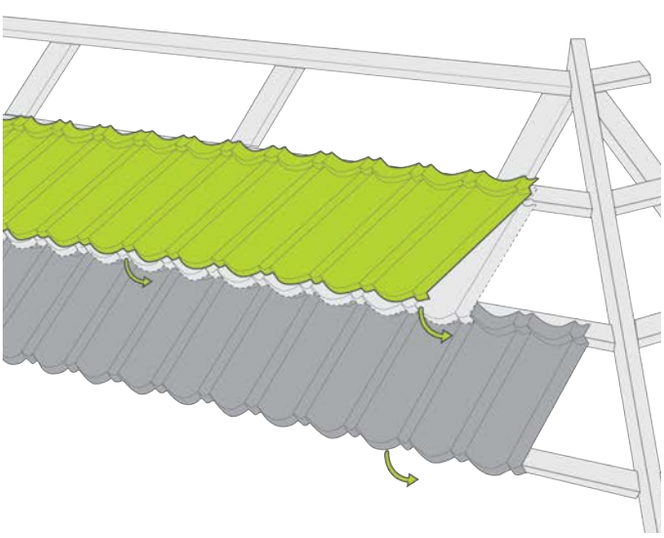

fig.19 ROWS OVERLAPPING

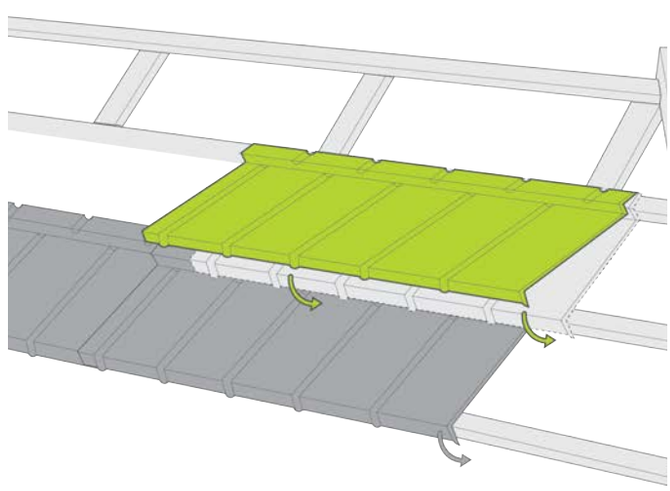

fig.20 ROWS OVERLAPPING

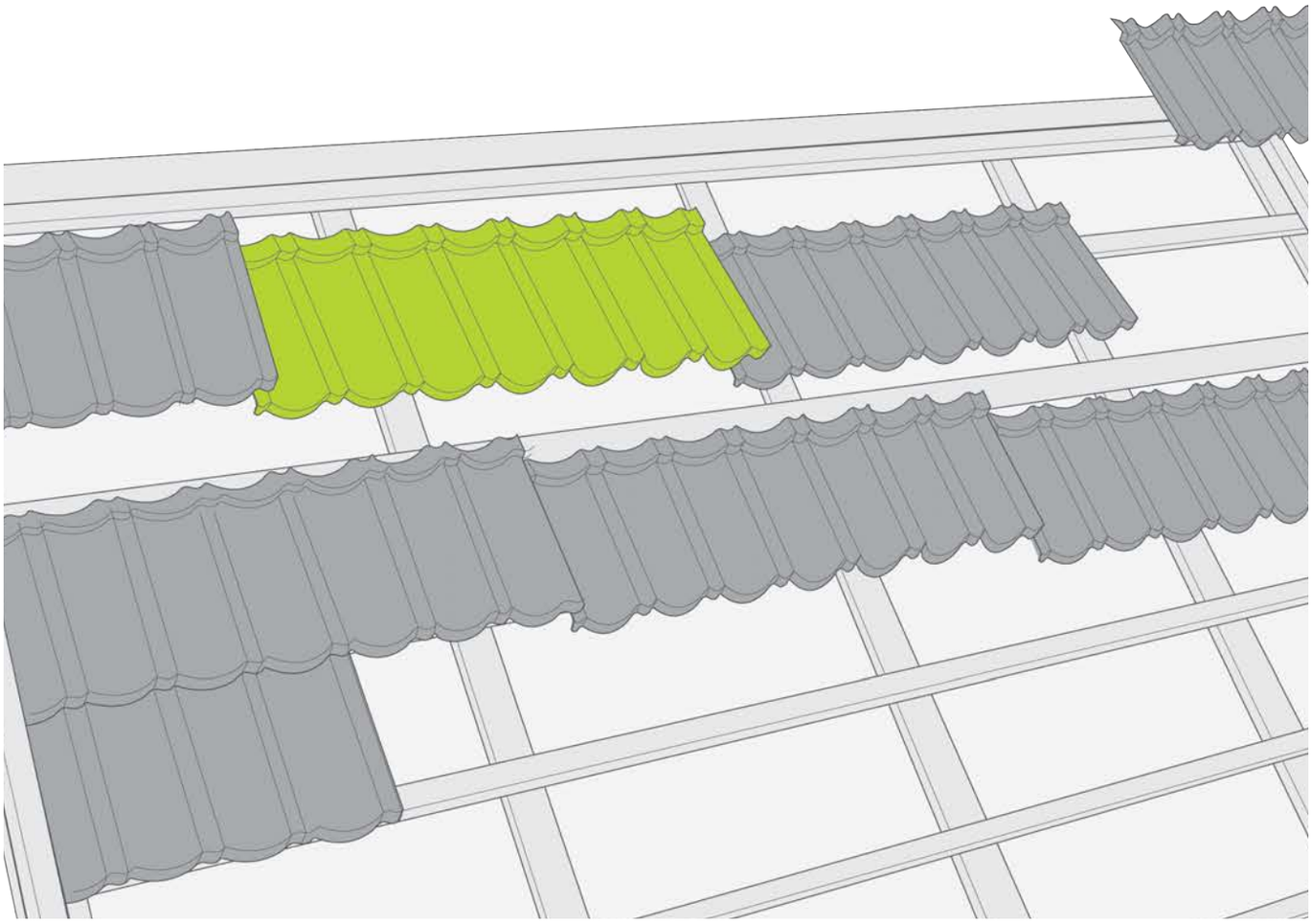

fig.21 INTERLACED INSTALLATION OF THE MODULES

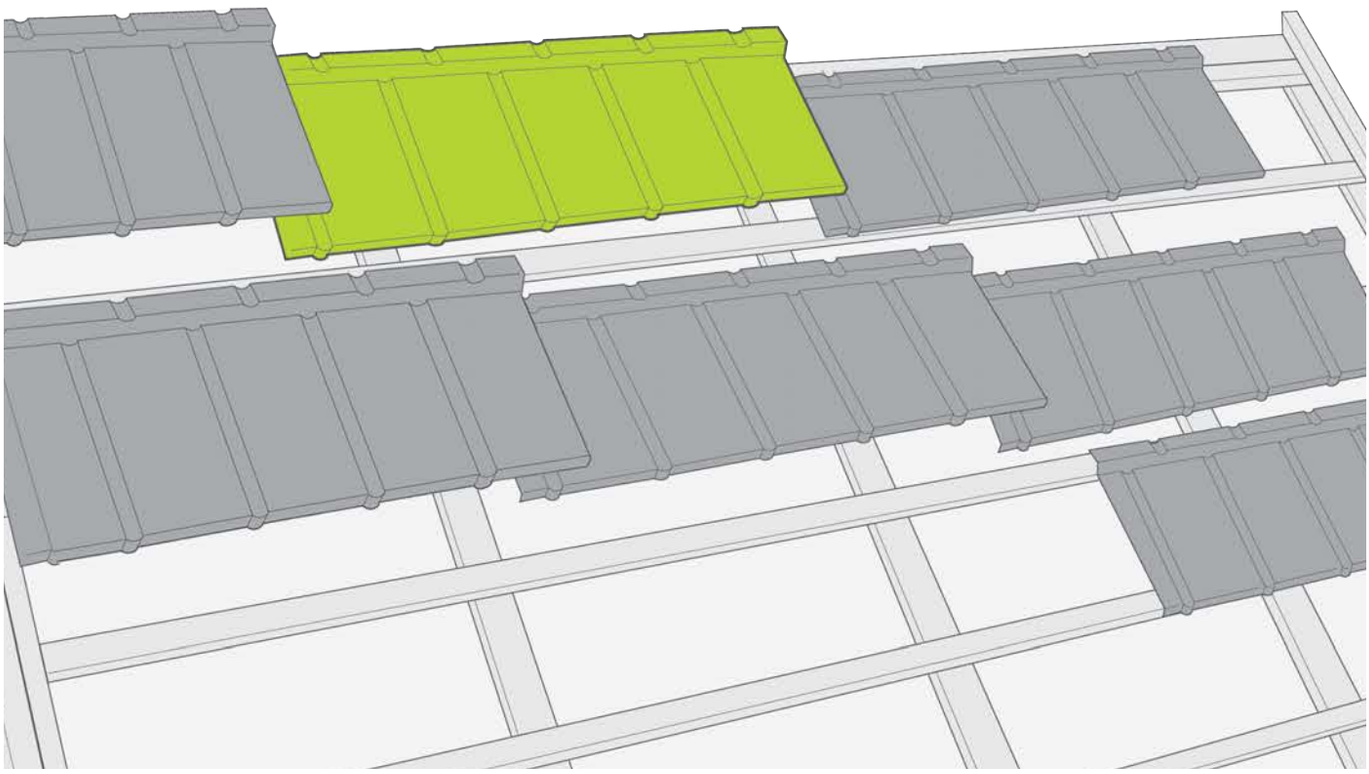

fig.22 INTERLACED INSTALLATION OF THE MODULES

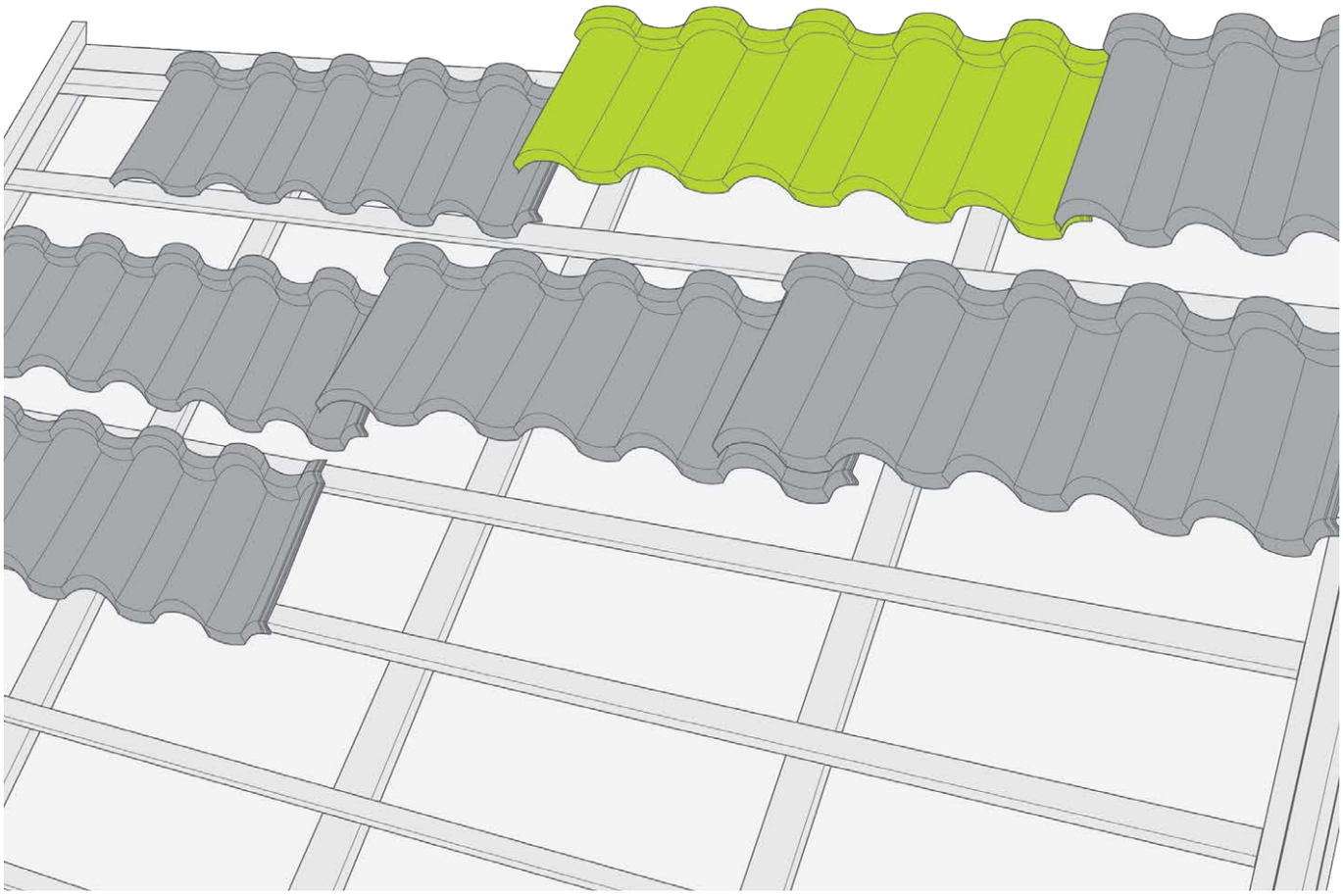

fig.23 INTERLACED INSTALLATION OF THE MODULES

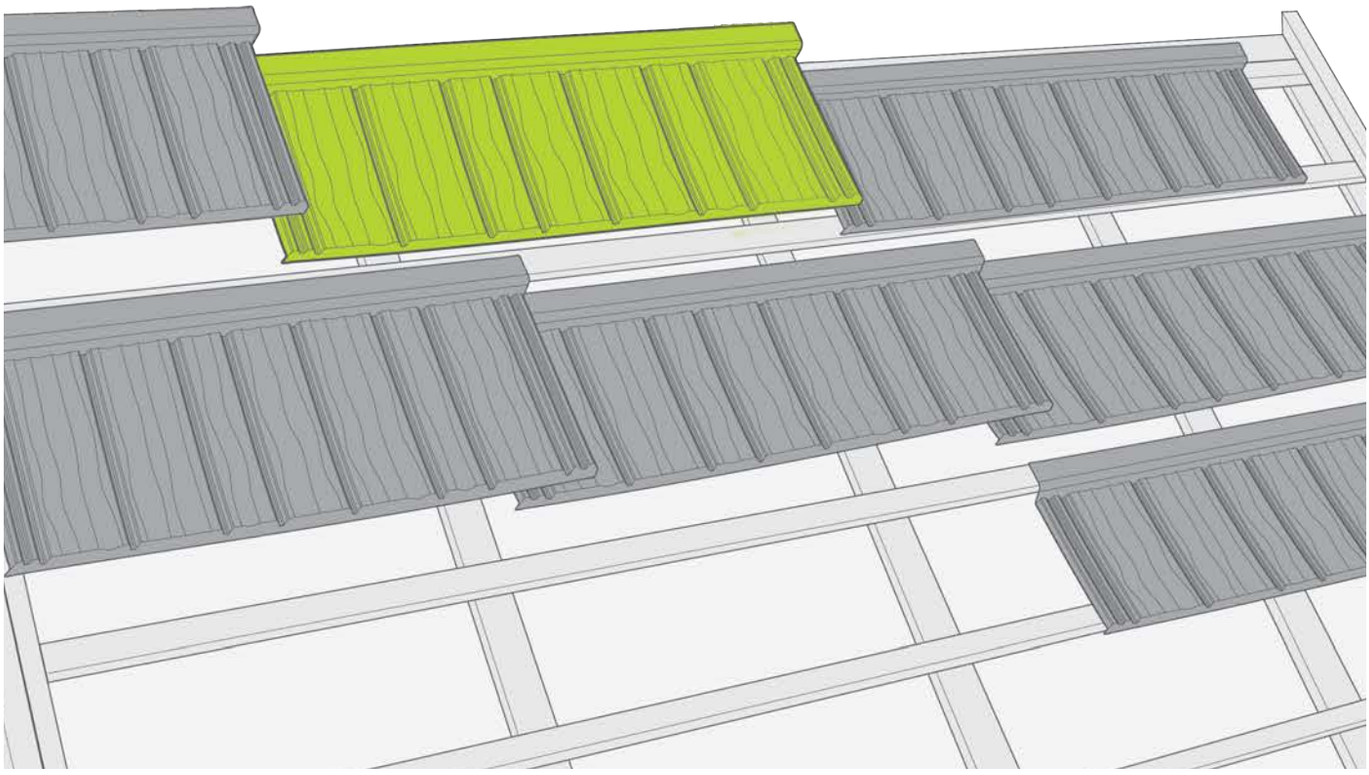

fig.24 INTERLACED INSTALLATION OF THE MODULES

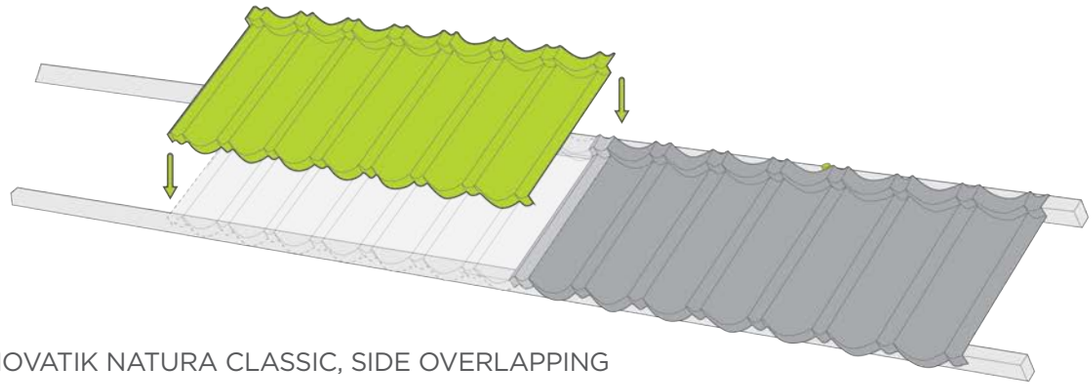

fig.25 NOVATIK NATURA CLASSIC, SIDE OVERLAPPING

MANUAL FIXING

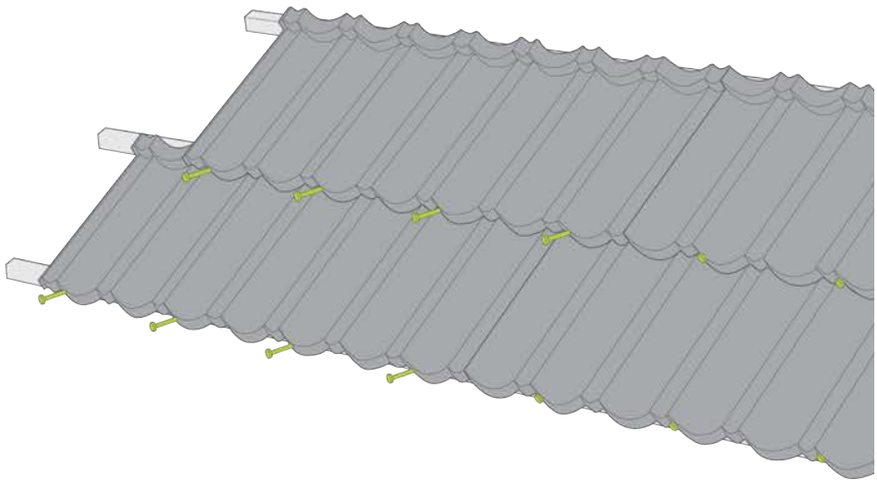

fig.26 NOVATIK NATURA CLASSIC - NAILS FASTENING POINTS

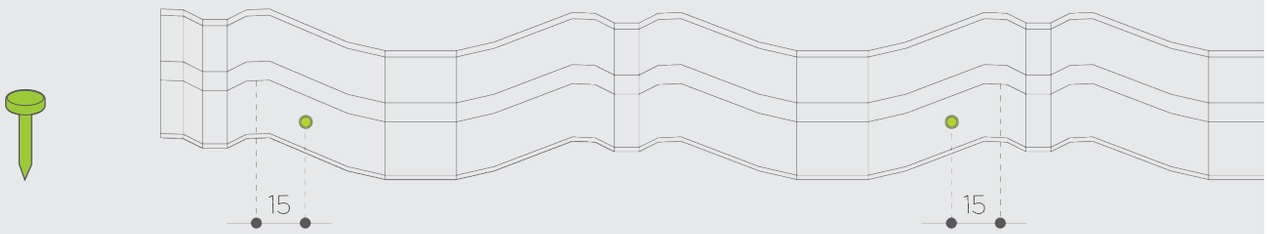

The nail is knocking 15 mm from the shaft shown on the left or right.

fig.27 NOVATIK NATURA CLASSIC, FASTENING NAIL POSITIONS

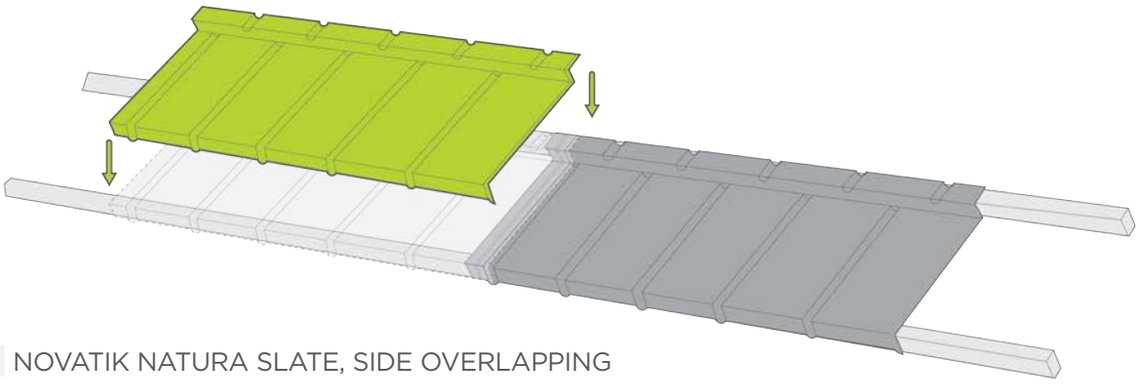

fig.28 NOVATIK NATURA SLATE, SIDE OVERLAPPING

MANUAL FIXING

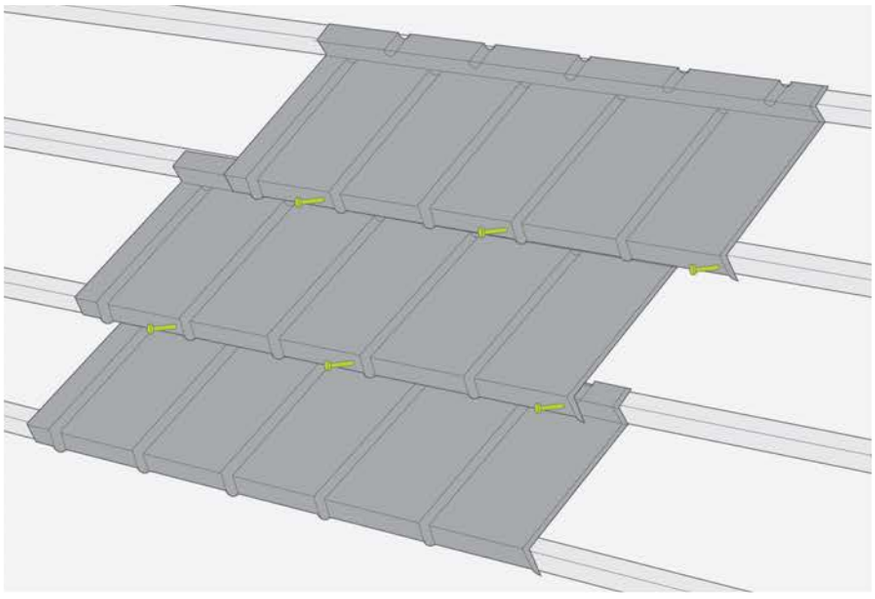

fig.29 NOVATIK NATURA SLATE - NAILS FASTENING POINTS

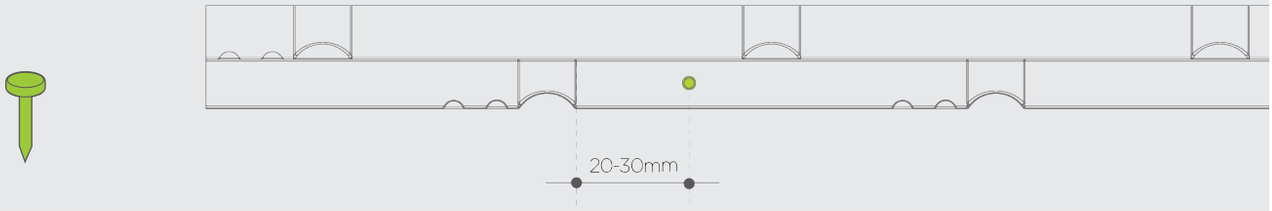

The nails are knocks at a distance of 20-30 mm from the start of small waves.

fig.30 NOVATIK NATURA SLATE, FASTENING NAIL POSITIONS

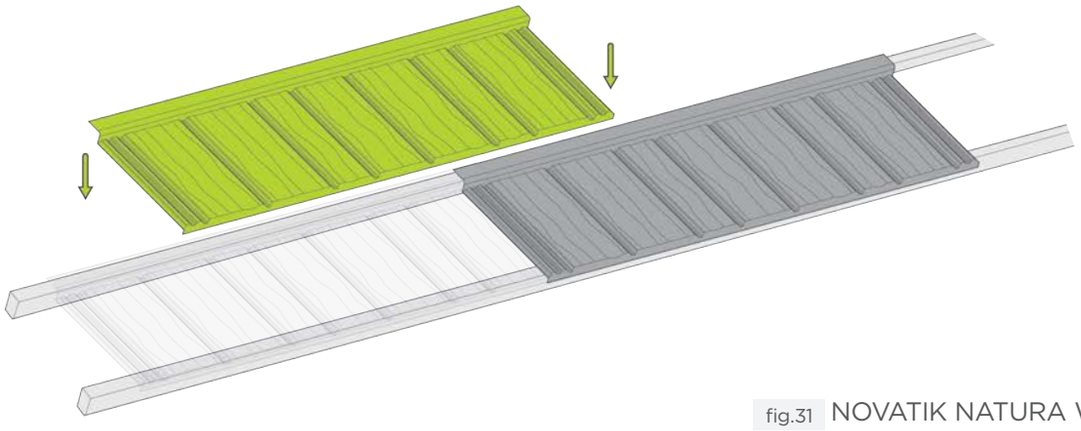

fig.31 NOVATIK NATURA WOOD, SIDE OVERLAPPING

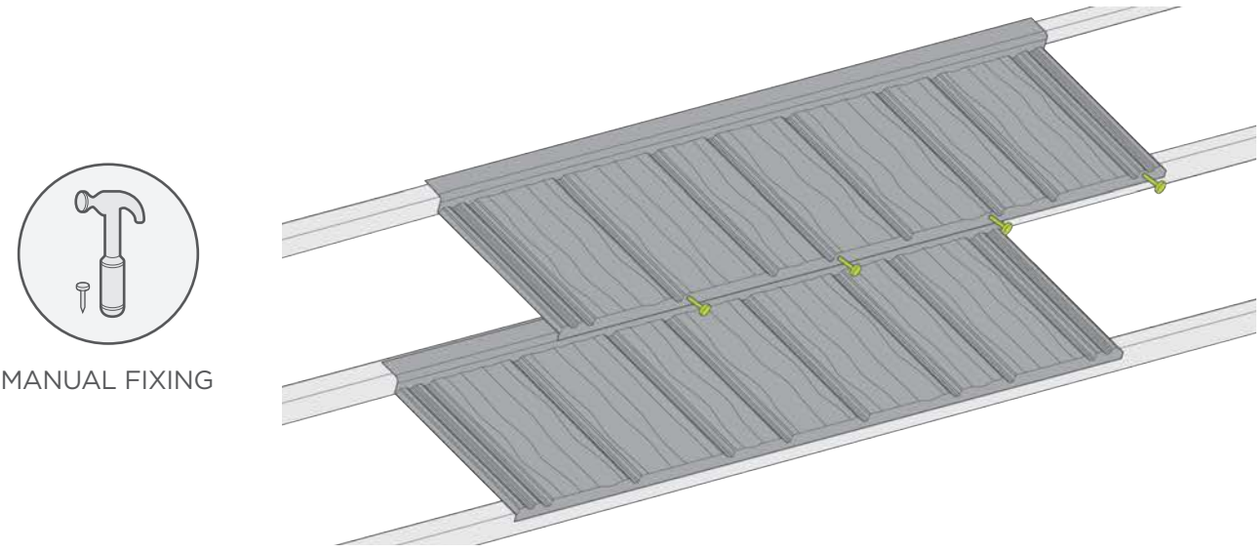

fig.32 NOVATIK NATURA WOOD - NAILS

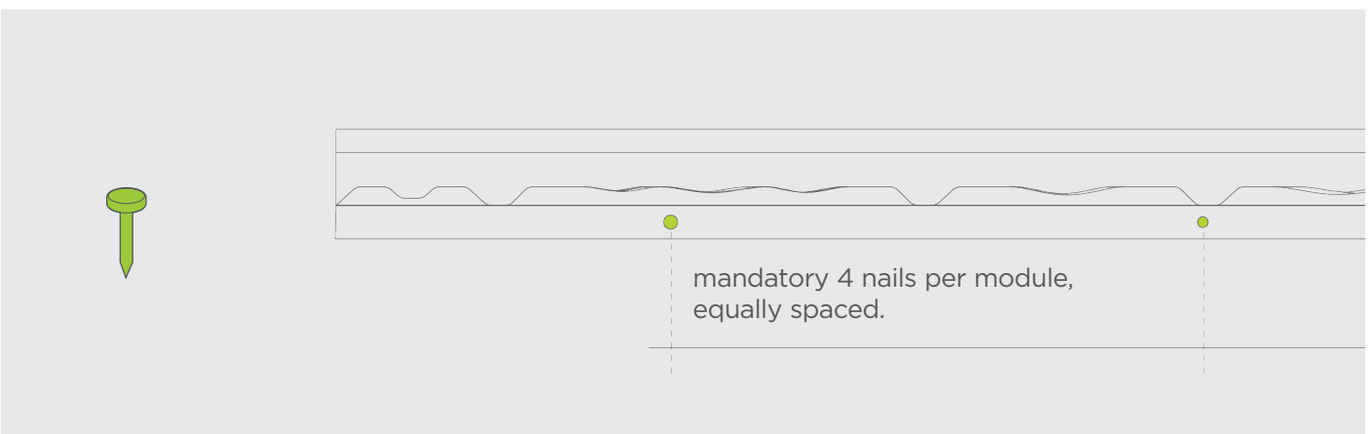

fig.33 NOVATIK NATURA WOOD, FASTENING NAIL POSITIONS

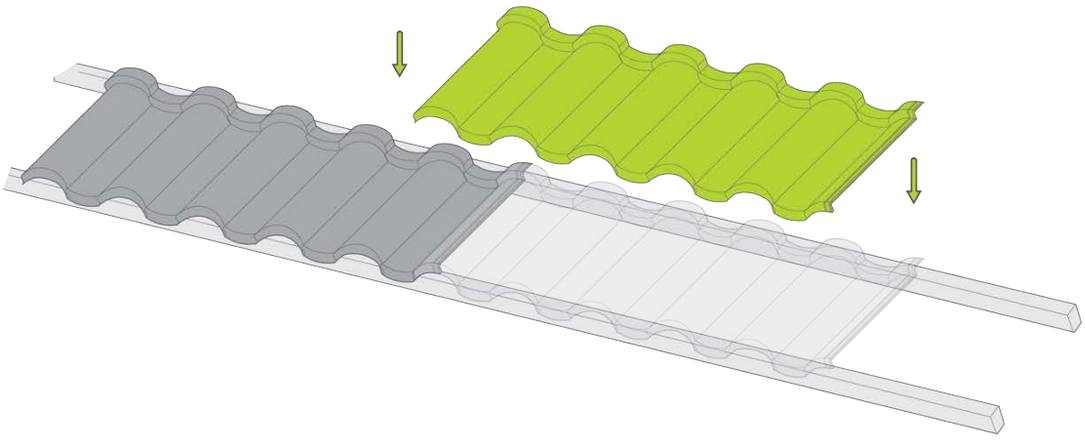

fig.34 NOVATIK NATURA ROMAN, SIDE OVERLAPPING

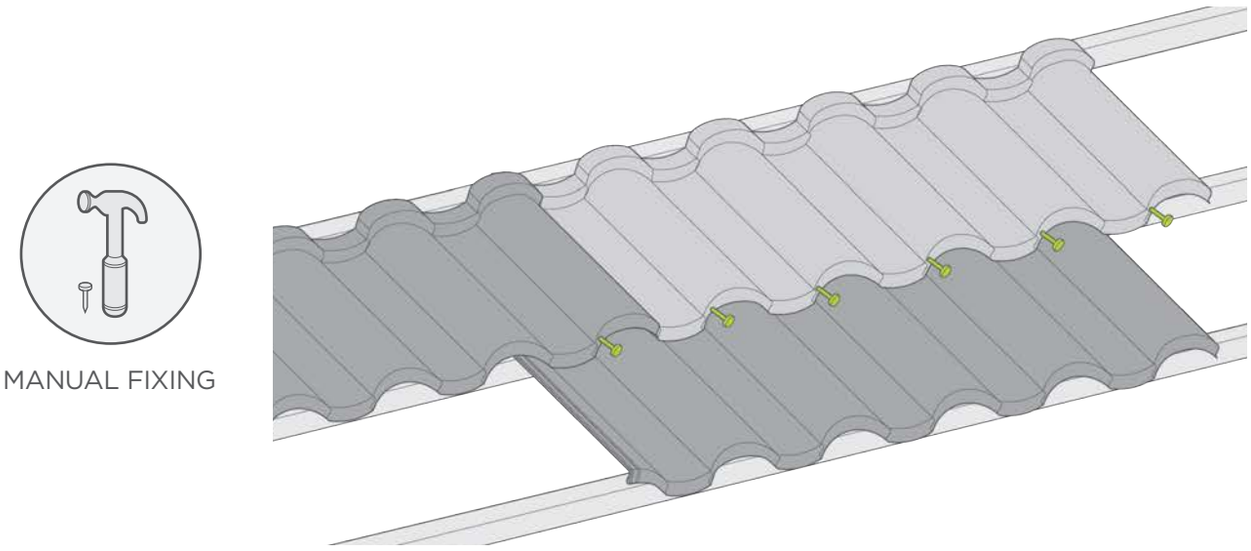

fig.35 NOVATIK NATURA ROMAN - NAILS FASTENING POINTS

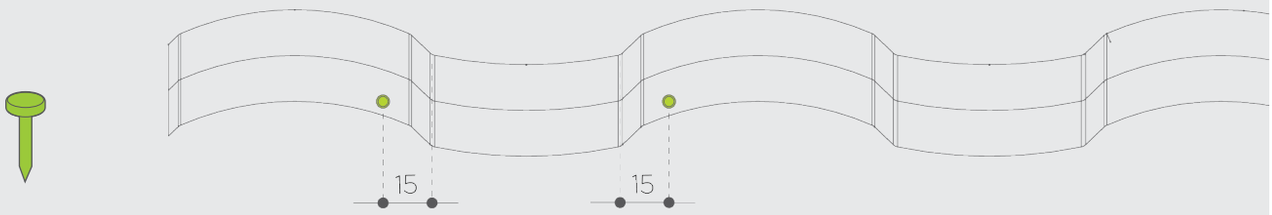

The nails are knocks at a distance of 15 mm from the start of small waves, on the left or right.

fig.36 NOVATIK NATURA ROMAN, FASTENING NAIL POSITIONS

The cut tiles used in the ridge, box barge, side (wall) flashing shall be bent approx. 40-50 mm upwards (fig. 37; 41; 42; 43; 44; 45; 46) and downwards in the case of valleys (fig. 38).

The used cut tiles shall include at least one whole tile for secure installing. Bends shall be performed using a bender, hand bender or the rubber hammer.

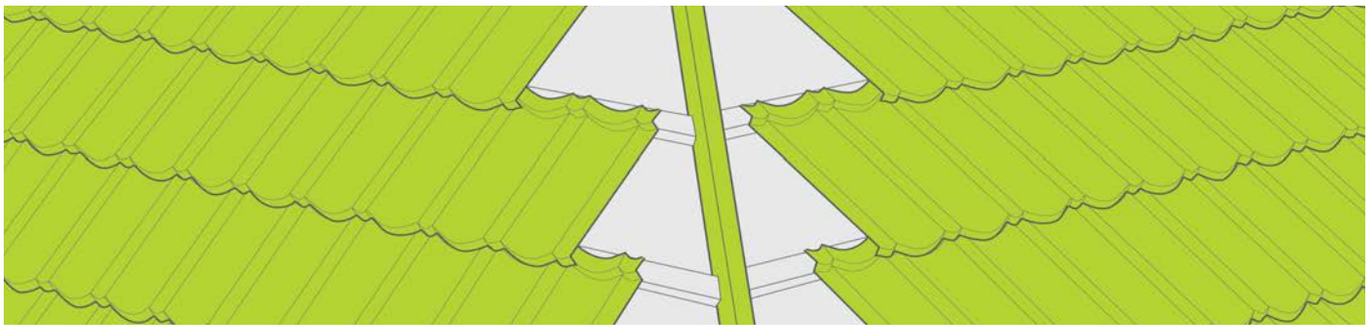

fig.37 INSTALLING TILES IN THE INCLINED RIDGE AREA

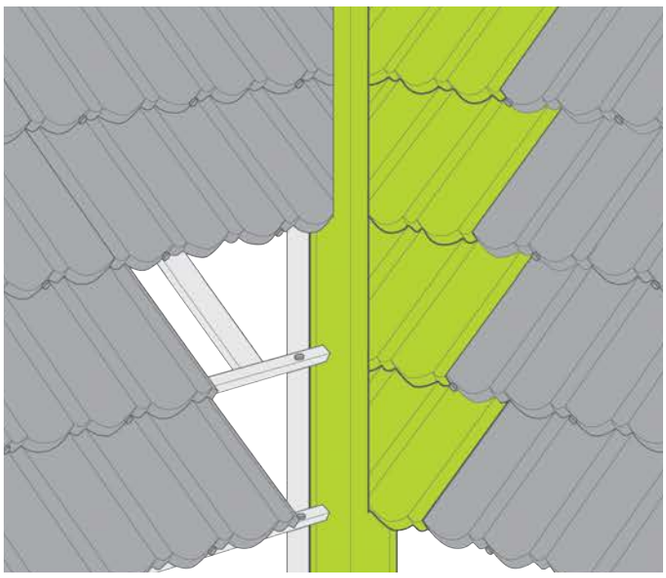

fig.38 INSTALLING AND BENDING TILES IN THE VALLEYS AREA

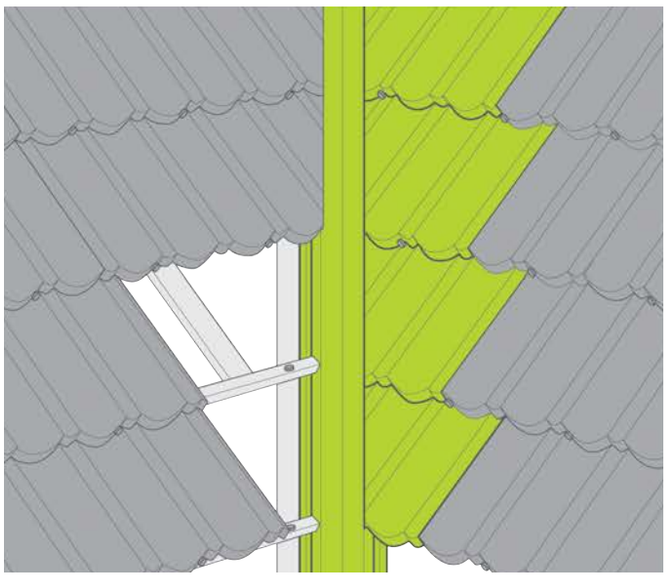

fig.39 INSTALLING THE TILES IN THE VALLEYS AREA WITHOUT BENDING

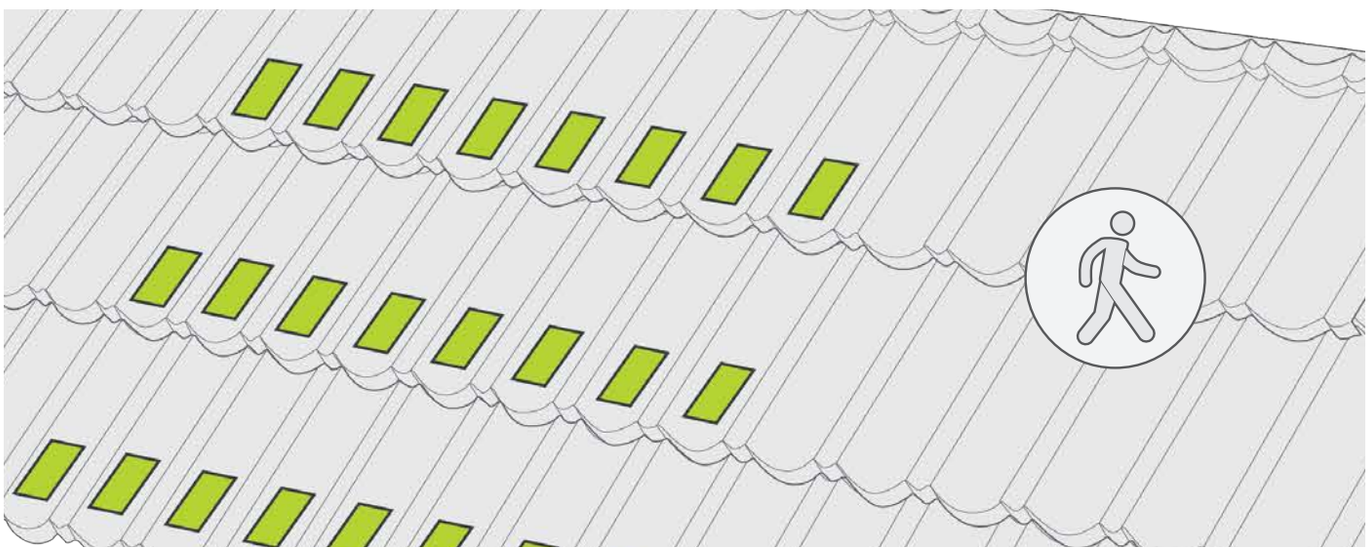

fig.40 RECOMMENDED AREAS FOR WALKING ON THE INSTALLED MODULES

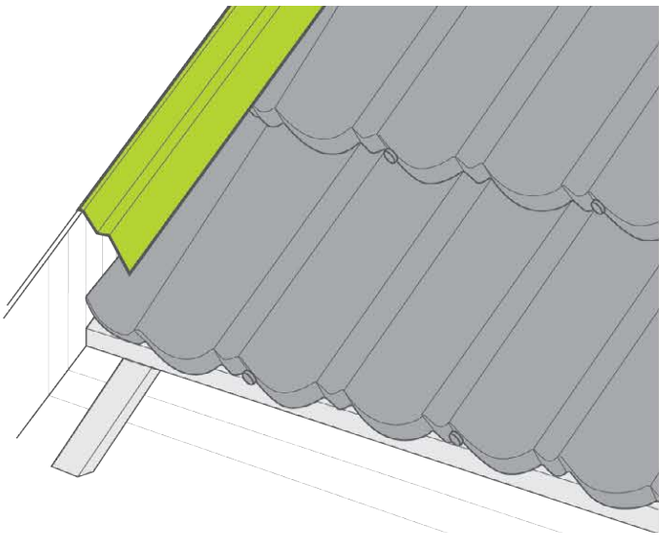

fig.41 FIXING WALL FLASHINGS

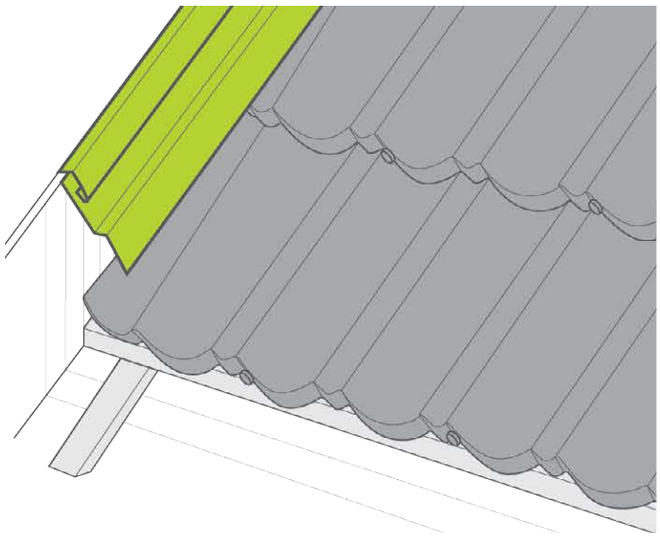

fig.42 INSTALLING WALL FLASHINGS (ALTERNATIVE)

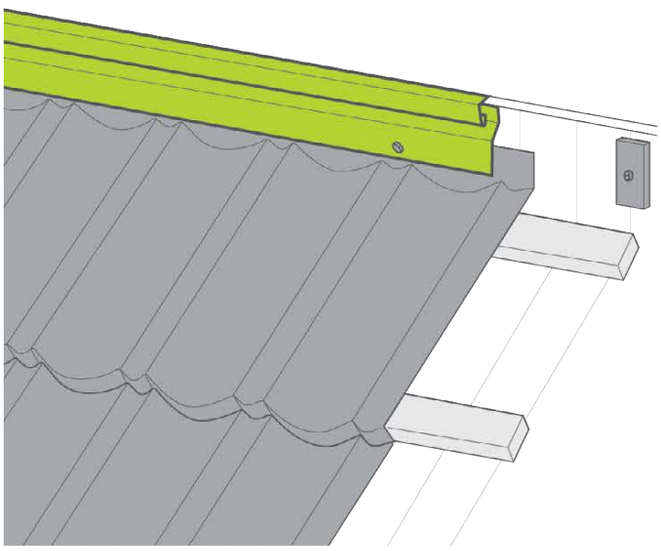

fig.43 FIXING HORIZONTAL FLASHINGS (ALTERNATIVE)

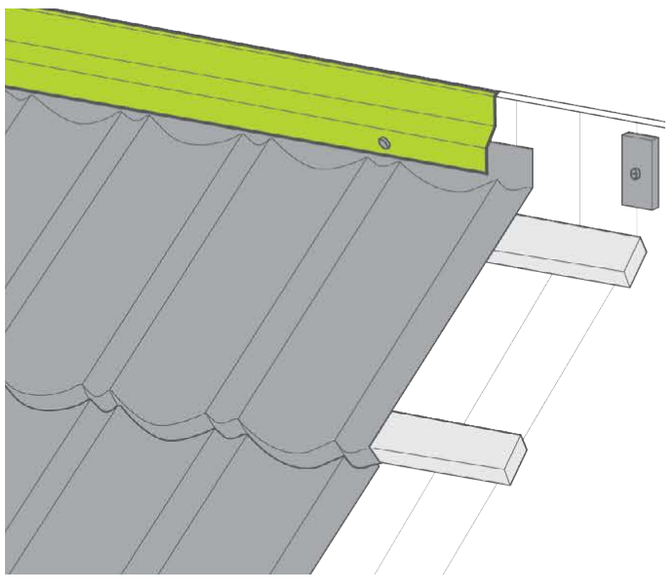

fig.44 FIXING HORIZONTAL FLASHINGS

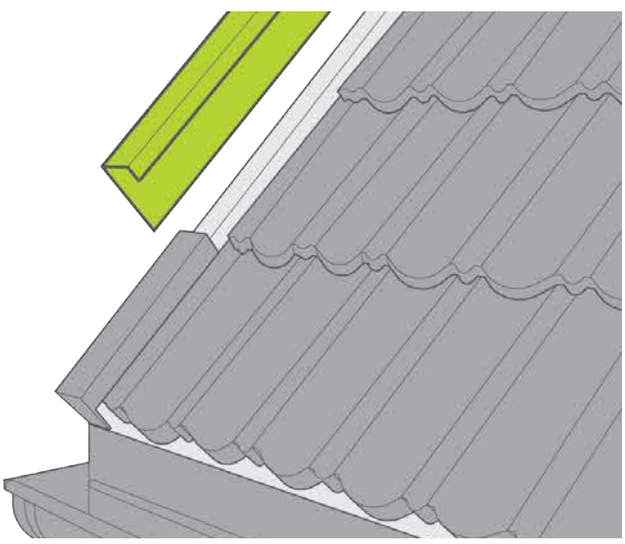

fig.45 INSTALLING FASCIA BOARDS

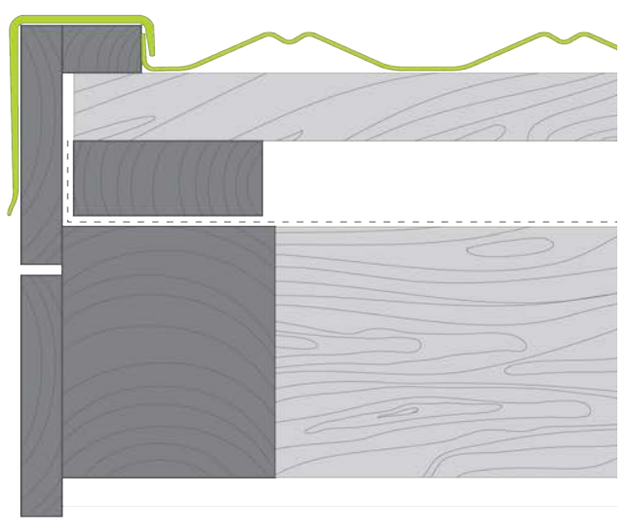

fig.46 INSTALLING TILES AT FASCIA BOARDS – SECTION

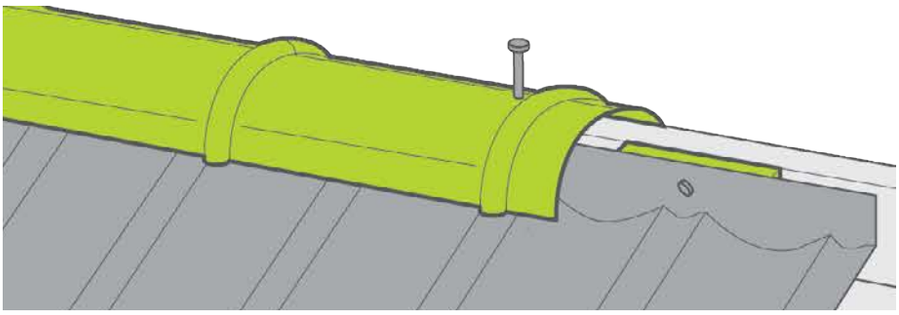

fig.47 HORIZONTAL RIDGE INSTALLATION

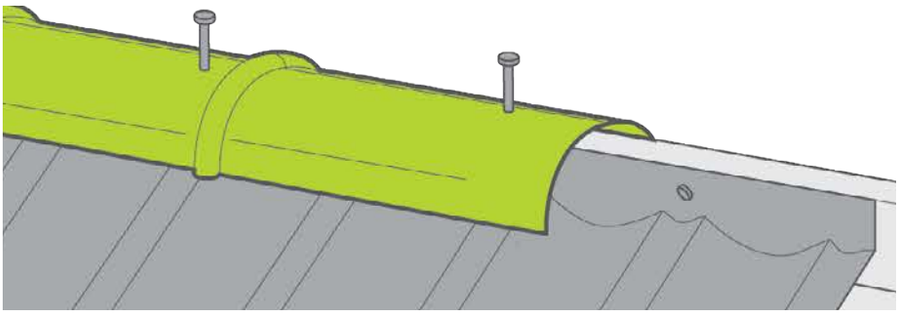

fig.48 BARREL TRIM INSTALLATION

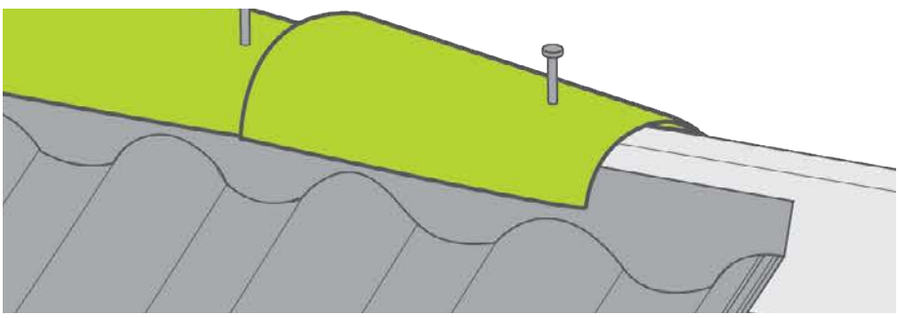

fig.49 INSTALLATION OF THE NOVATIK NATURA ROMAN RIDGE VERSION 1

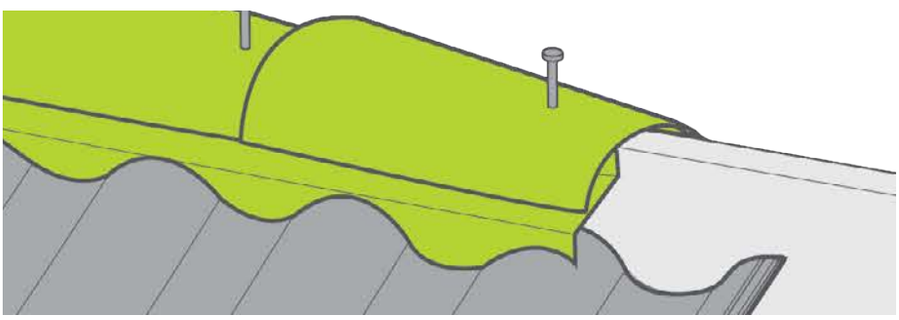

fig.50 INSTALLATION OF THE NOVATIK NATURA ROMAN RIDGE VERSION 2

The last row is fixed in the horizontal ridge area. It will require the use of a bender and guillotine (or hand shears) because the space will be smaller than the module's 370 mm width. The distance from the last tile to the ride batten is measured and marked. Bend to the desired angle, using a bender and cut 40-50 mm above the bending line. In the upper area, they shall be fastened to the ridge batten using nails (fig. 35-36). It is very important for the tile to be bent and then adjusted, avoiding deformation.

For Novatik NATURA ROMAN we can use the flashing ridge, in which case there is no longer needed the bending of modules (fig. 50).

>INSTALLING ACCESSORIES

STEP 8

1. Fixing eaves flashing – see fig. 5
2. Fixing wall flashing – see fig. 41-44
3. Fixing barrel trim – see fig. 47-53
4. Fixing box barges – see fig. 45-46
5. Installing roof windows

Installation of roof windows shall be performed according to the manufacturers' instructions, with the observation that in case of the Novatik roofs the fastening supports have to be installed at the level of the vertical battens. The tiles installed on the sides shall be bent downwards covering the sealing rubber strips. Fixing of tiles in the lower or upward area of the window. This situation can be avoided using tile offcuts.

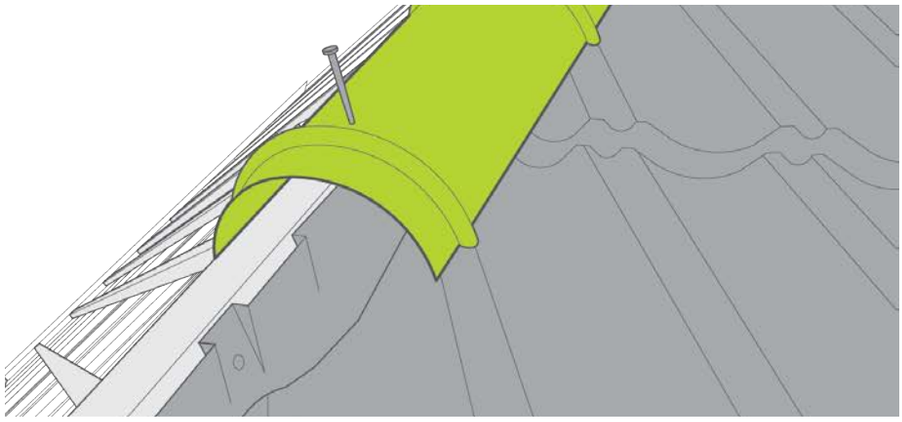

fig.51 BEVELED RIDGE FIXING

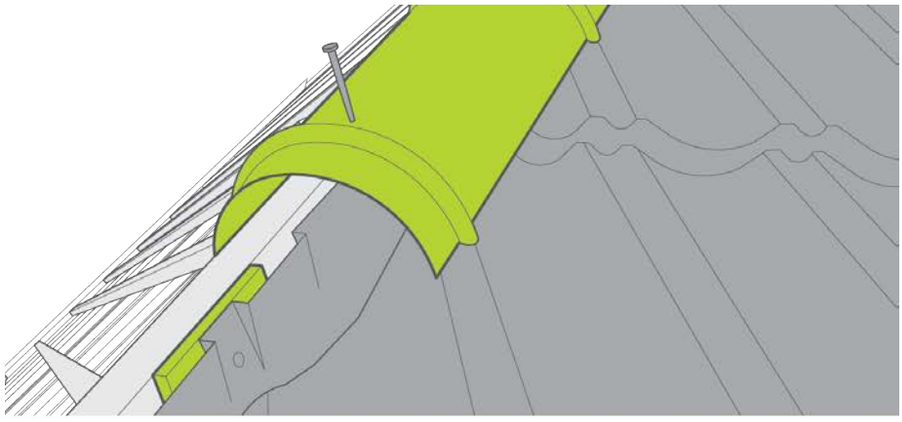

fig.52 BEVELED RIDGE FLEXING. VENTILATION IMPROVEMENT ALTERNATIVE

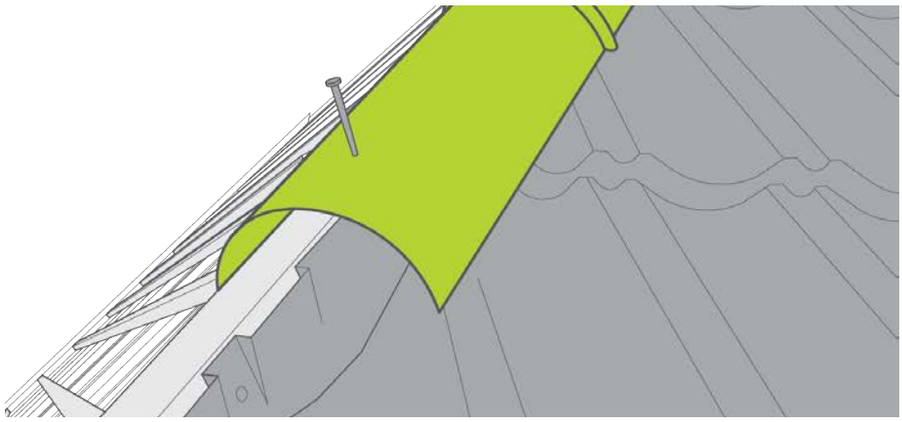

fig.53 BARREL TRIM FIXING

IMPORTANT

The sheet used to close the smoke chimneys is recommended to be Novatik METAL, pre-painted.

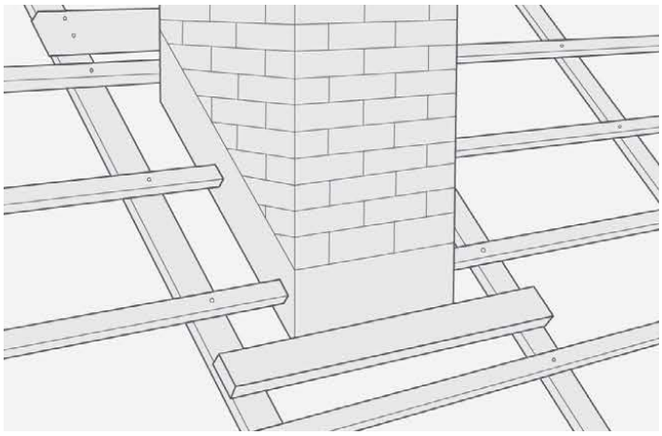

fig.54 CHIMNEY SEALING- STEP 1

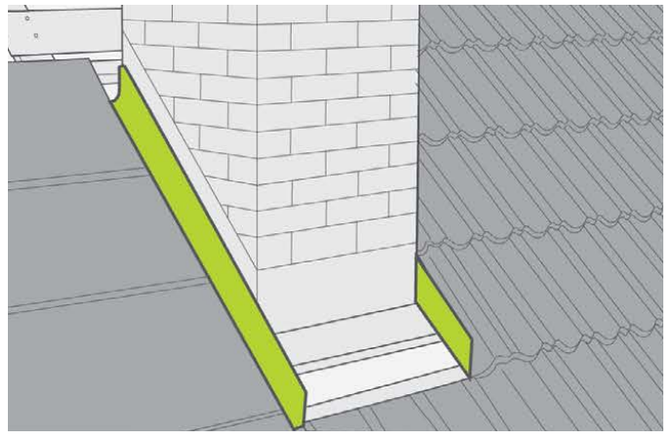

fig.55 CHIMNEY SEALING- STEP 2

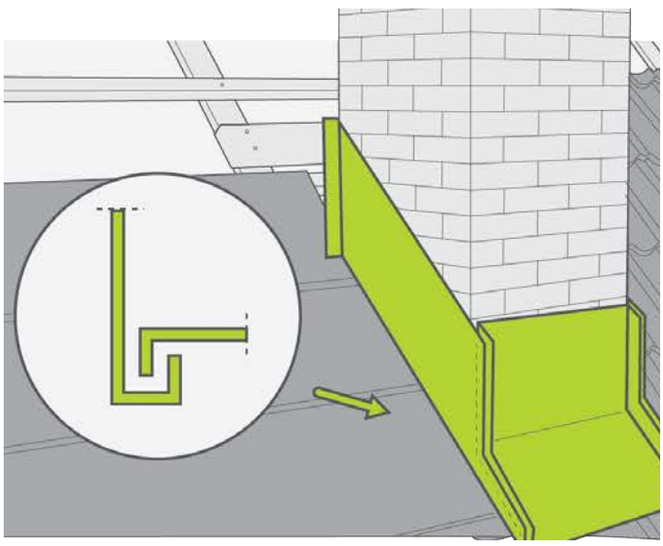

fig.56 CHIMNEY SEALING- STEP 3

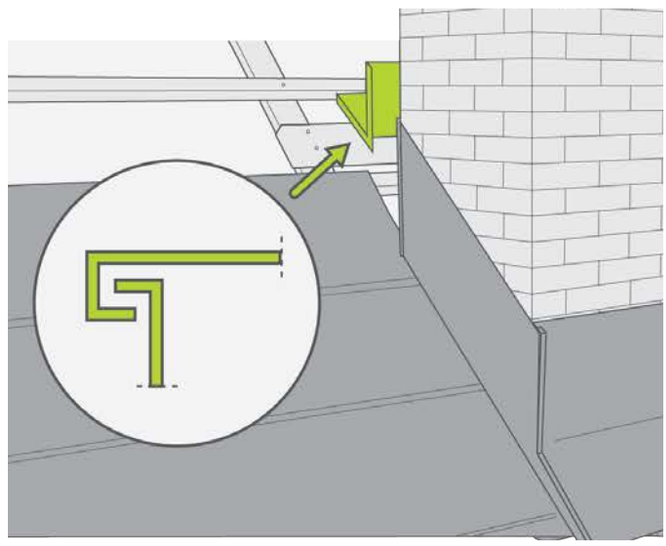

fig.57 CHIMNEY SEALING- STEP 4

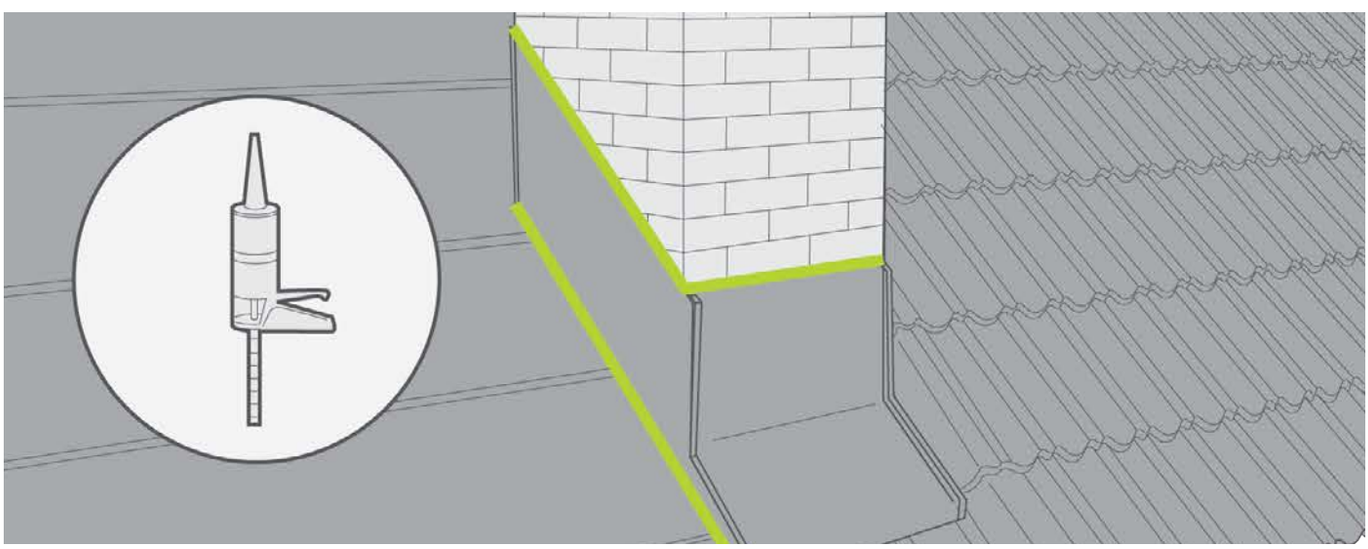

fig.58 CHIMNEY SEALING- STEP 5

>INSTALLING VENTILATION SYSTEMS

Novatik ventilations are easy to install by using a few simple fitting instructions. A very small adjustment is required, because the ventilation base plates already correspond to the sections on the Novatik panels. In snowy regions, where snow quantities are high, ventilation should always be protected against break-up or detachment.

STEP 9

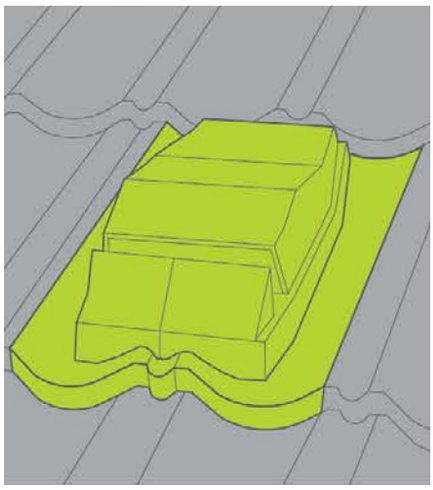

INSTALLING VENTILATION

>SANITARY VENT

In case of natural ventilation (fig. 59) for optimum efficiency, it is important that the roof vents to be placed as close as possible to the ridge (maximum 1 meter by ridge). For mechanical ventilation (fig. 60), the vents location is less important. However, it is recommended for them to be located relatively close to the ridge. In those regions where there are large amounts of snow, the ventilation must be installed up to 1 meter away from the ridge and a snow stopper system installed above ventilation.

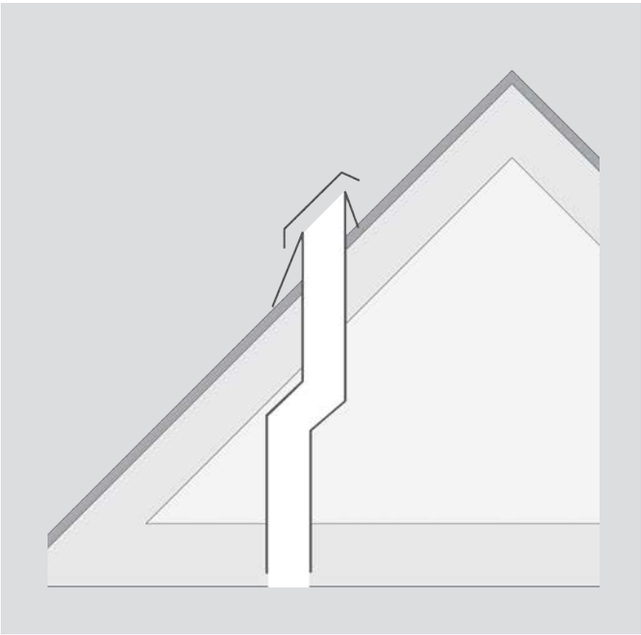

fig.59 NATURAL VENTILATION

Optimum ventilation placement has to be as close as possible to the ridge (max. 1 meter from the ridge)

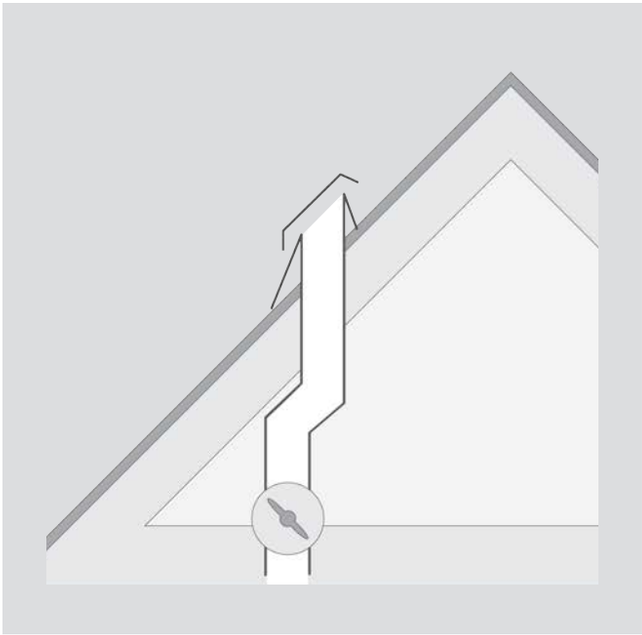

fig.60 MECHANICAL VENTILATION

For mechanical ventilation, the placement of ventilation/airway vents is not as strict, but it will be done as close as possible to the ridge.

>VENT

To remove the condensation and humidity from the space under the metal roofing, it is important to maintain a continuous ventilation throughout the roof area, by ventilating each section. The most efficient way of ventilating is to provide a fresh airway at the eave, and an outlet near the ridge, through ventilation spaces or through field ventilation. Novatik ventilations are installed between two steel panels. After being sealed using a butylic strip or mastic then it's overlayed with the Novatik roof panels onto the base of the ventilation on both sides and then fastened with screws or nails.

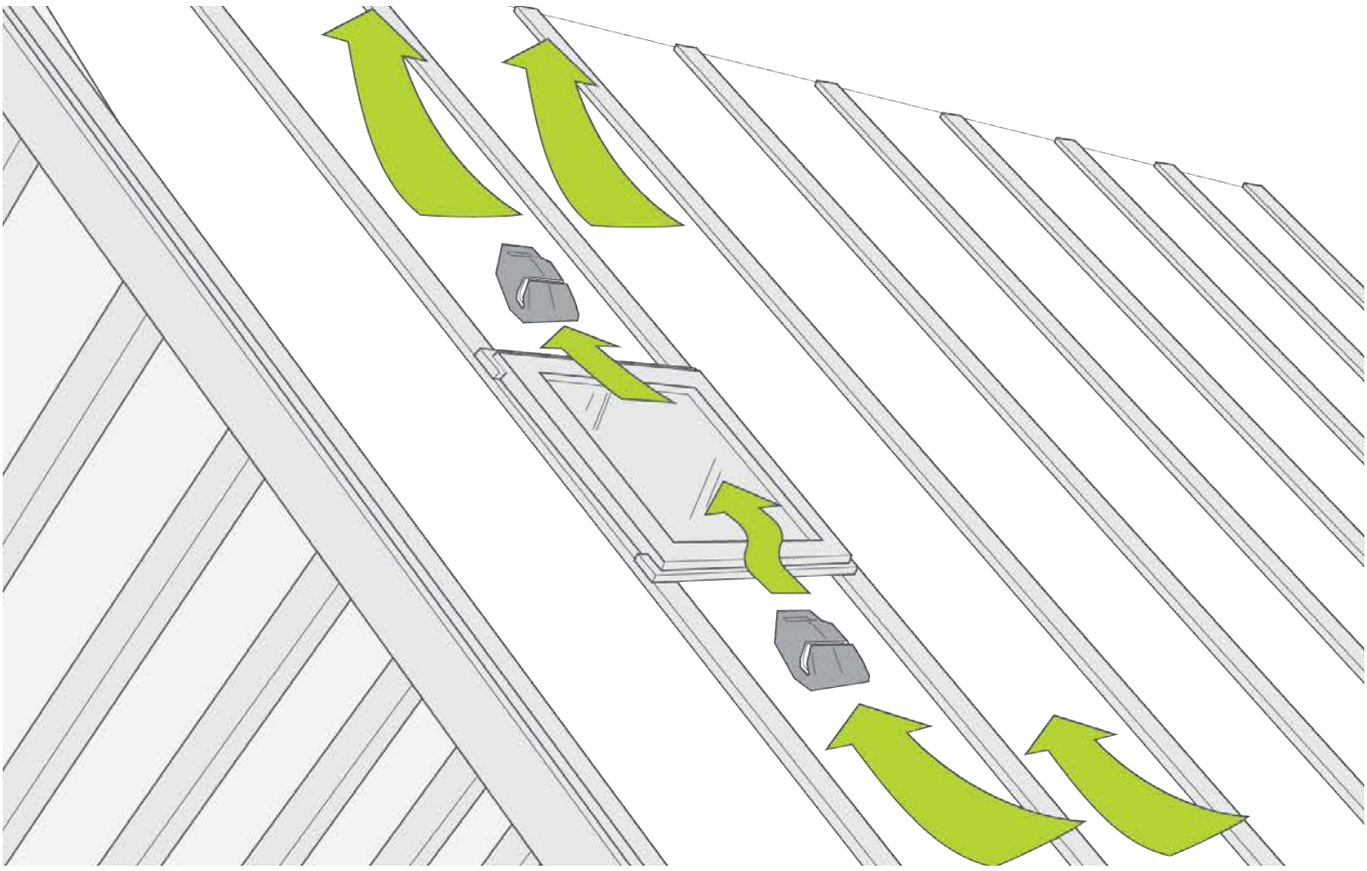

>FINISHING

STEP 11

Check that all tiles and accessories were correctly installed. If minor damages appear during instalation, they can be easily fixed using the touch-up spray.

>HANDOVER OF THE WORK AND ACCEPTANCE DOCUMENTATION

STEP 12

Although the Novatik NATURA stone chip coated metal roof tiles -requires minimal inspection and maintenance, these play a key role in maintaining performance and identifying problems before they require costly repairs. Novatik NATURA roof systems are exposed to atmospheric stress throughout their lifetime, ultraviolet radiation, wind, rain, hail, snow and heat who can affect the performance of a roof. Performance is based on a good design, quality materials, correct installation and a minimum preventive maintenance schedule. Regular inspection of the roof at least once a year or after each severe weather phenomenon (storm, hail or strong viscera) can reveal elements in the structure of the roof that have become detached due to the surface install or may indicate damage to the Novatik NATURA modules, caused by nearby trees or other wind material. It is particularly important to remove crop debris, muscles, branches, dry-leaf deposits or soil, rubble, textiles or paper from the surface of the roof because, once caused by rainwater, they can block natural water discharge from the cover through the drainage system. Also, the metal scrap remaining from the roof construction (nails, panel fragments, chips, etc.) will have to be removed as they can promote punctual corrosion. Particular attention should be paid during the winter period in order to keep ice deposits in areas where natural melting is made more difficult by turning to the north under supervision. Valleys and gutters will have to be deiced as necessary, thus eliminating the risk of ice damage. The technical inspection is recommended at least every five years for a thorough check of the overall condition of the covering. The condition of the joints and fasteners shall be examined, the functionality of the roof as a whole shall be checked, both for impermeability and for ventilation under the cover. The checks are recommended to be carried out by specialized firms and any problems encountered must be notified to the manufacturer immediately.

NOVATIK® HELPS YOU STAND OUT

This guide was created to help you install Novatik tiles. The guide offers step-by-step details for correct tile installation. The guidelines in this manual should be regarded as recommendations only, the liability for the installation is held by individual installers. This guide includes almost all possible on-site situations. However, if you need additional support, our contact data is available on the back cover.

NOVATIK® IS A REGISTERED TRADEMARK OF NOVATIK

NOVATIK SRL is the developer and manufacturer of Novatik METAL roofing systems (interlocking steel roof systems, Colofer® cover), Novatik NATURA interlocking steel roof systems, stone chip coated panels), Novatik CLICK (standing seam roofs) and rainwater systems Novatik RONDA and QUADRA. Novatik SRL is also the exclusive representative in Romania of DELTA roof protection membranes (anticondensation membrane, vapour barriers)

Our mission is to provide innovative, efficient, long lasting and aesthetically pleasing roofing products, together with the highest customer satisfaction. We aim to work closely with our customers, resolve problems and build trust and total confidence in our company and our products.

Novatik®

Manufactured by: NOVATIK SRL
HEAD QUARTERS: 9 Mai street, no. 75,
105 200 Băicoi, Prahova, România
Tel: +40 244 260 140
Fax: +40 244 260 145
office@novatik.ro
novatik.ro